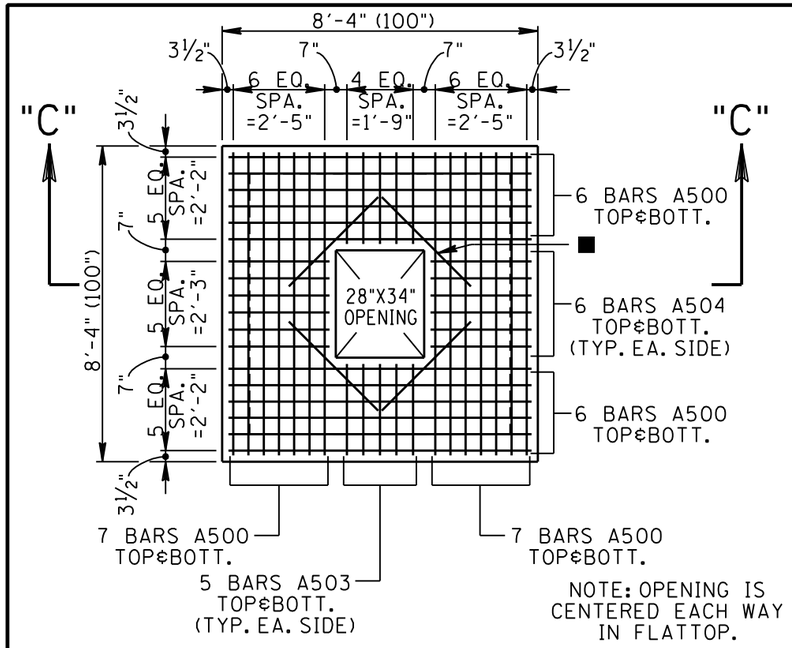

PLAN VIEW OF FLATTOP

■: INDICATES DIAGONAL BAR A501 OVER BOTTOM MAT OF REINFORCEMENT (TYP.-EA. CORNER OF OPENING)

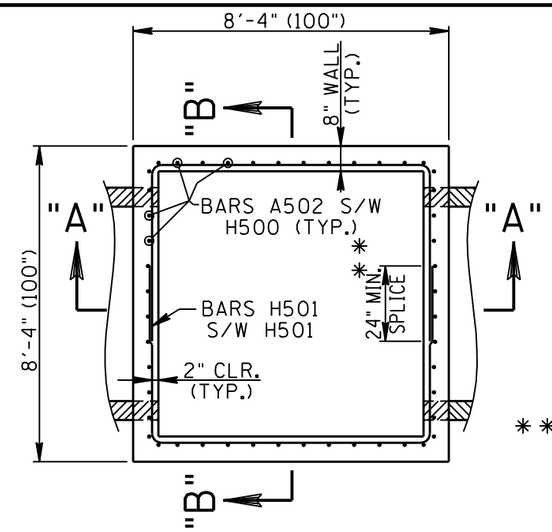

SECTION "E-E" THRU TOP OF BASE UNIT WALLS

GENERAL NOTES

1. THIS PRECAST DESIGN IS PRESENTED AS AN ALTERNATE TO TDOT STANDARD DRAWING NO.D-CB-12SD. SEE STD. D-CB-12SD AND D-CB-99 FOR ADDITIONAL FUNCTIONAL AND INSTALLATION REQUIREMENTS AND FOR ADDITIONAL REINFORCEMENT AROUND OPENINGS.
2. THE FOLLOWING MATERIALS PROPERTIES WILL BE REQUIRED FOR THIS PRECAST ALTERNATE:
   CONCRETE:
   FLAT-TOP: F'C= 4,000 POUNDS PER SQUARE INCH AT 28 DAYS.
   BASE UNIT: F'C= 5,100 POUND PER SQUARE INCH AT 28 DAYS.
   REINFORCING STEEL: ASTM A615, FY= 60,000 POUNTS PER SQUARE INCH.
3. THIS PRECAST ALTERNATE SHALL BE AS CONSTRUCTED BY SHERMAN-DIXIE CONCRETE INDUSTRIES, INC. (SDCI).

**: BAR H501 SPLICES TO BE STAGGERED BY ROTATING EACH HORIZONTAL SET OF H501'S BY 90°.

■■: USE BARS H501 S/W H501'S ADJACENT TO CUT-OUTS FOR OPENINGS AND CUT BARS TO WITHIN 2" CLR. OF OPENING.

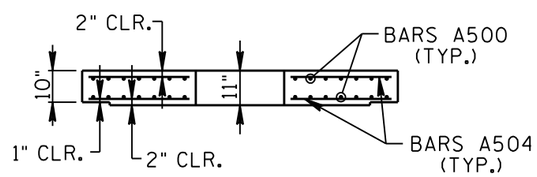

SECTION "C-C"-THRU FLATTOP

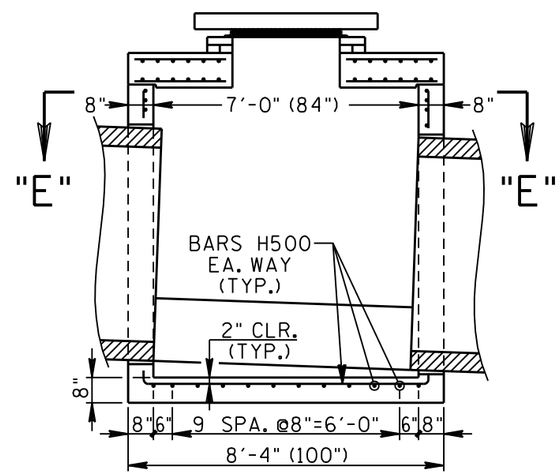

SECTION "A-A"

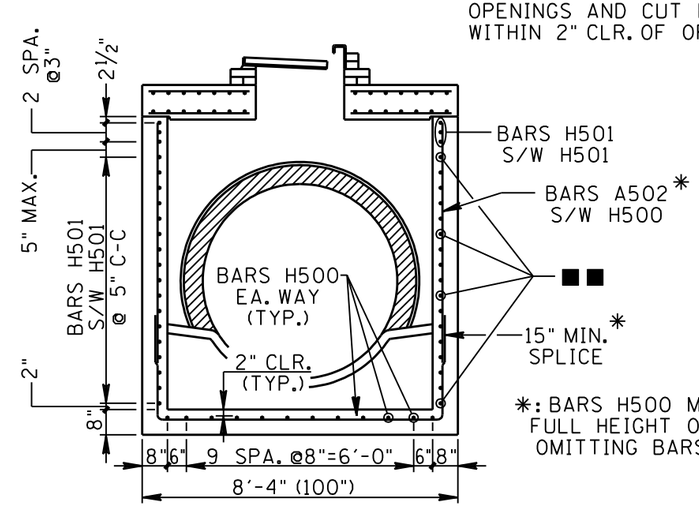

*: BARS H500 MAY RUN FULL HEIGHT OF BASE, OMITTING BARS A502.

SECTION "B-B"

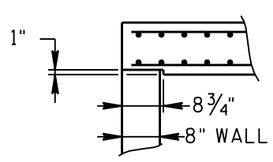

FLATTOP DETAIL AT EDGE

A500	96"
A501	40"
A502	VARIES
A503	29"
A504	31½"

BARS TYPE "A"

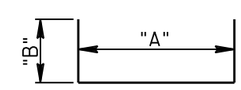

	"A"	"B"
H500	90½"	VARIES, (32" MIN.)
H501	89¼"	57"

BARS TYPE "H"

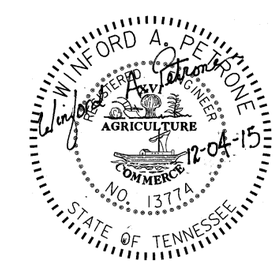

7' X 7' SHERMAN-DIXIE CONCRETE INDUSTRIES (SDCI) PRECAST ALTERNATE TO TDOT STANDARD NO. 12 CATCH BASIN

ISSUE / REVISIONS

NO.	DESCRIPTION	DATE	BY
1			BMP
2			BMP
3			

SHEET 1 OF 1