CONST. NO.

PROJECT NO.	YEAR	SHEET NO.
	2010	

REVISIONS

NO.	DATE	BY	BRIEF DESCRIPTION

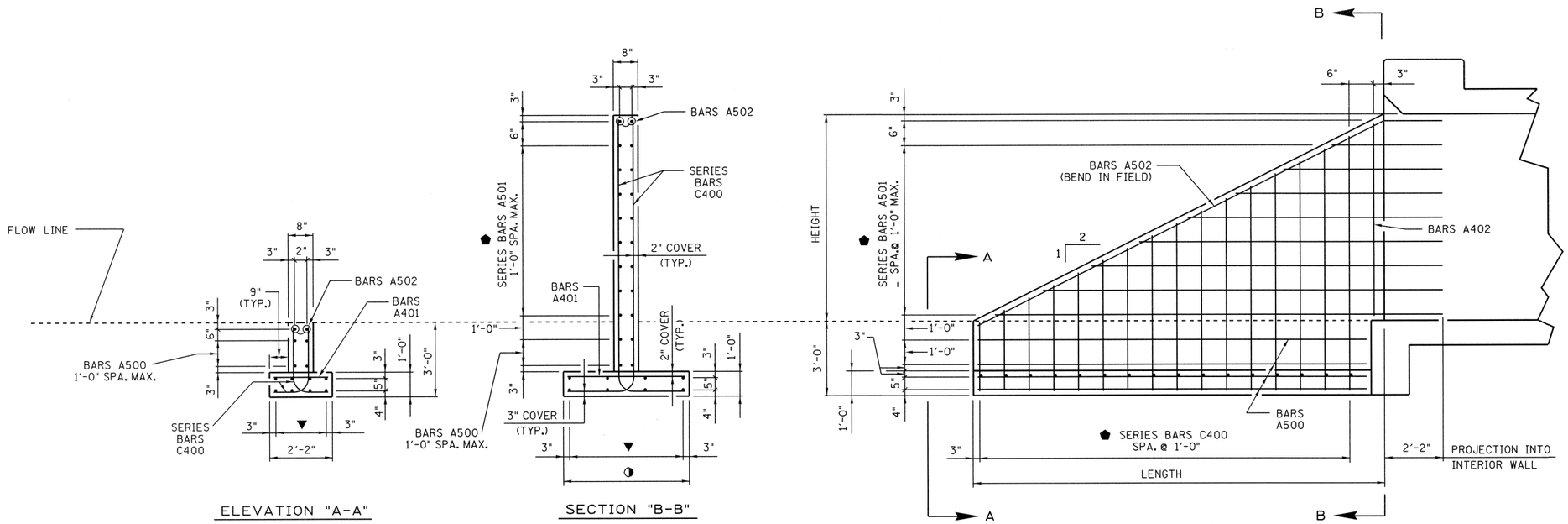

ELEVATION "A-A"

SECTION "B-B"

ELEVATION "C-C"

▼ DENOTES BARS A500 (TOP & BOTTOM) @ 3 EQUAL SPACES.
⬟ DENOTES DIMENSION, NUMBER OF BARS, AND BAR SPACING (1'-0" MAX.) VARIES IN ACCORDANCE WITH HEIGHT OF CULVERT.
◑ DENOTES FOOTING WILL TAPER 1:18 ON BOTH SIDES OF WALL. SEE TABLE FOR DIMENSION.

BOX BRIDGE DIMENSIONS AND QUANTITIES

HEIGHT (FEET)	LENGTH (FEET)	FOOTING WIDTH (FEET) ◑	CLASS "A" CONCRETE (C.Y.)	STEEL BAR REINFORCEMENT (LBS.)
6	12	3'-6"	2.7	417
7	14	3'-9"	3.4	514
8	16	4'-0"	4.1	618
9	18	4'-2"	4.9	729
10	20	4'-5"	5.8	848
11	22	4'-8"	6.8	975
12	24	4'-10"	7.8	1108
13	26	5'-1"	8.9	1250
14	28	5'-4"	10.0	1399
15	30	5'-6"	11.2	1555
16	32	5'-9"	12.5	1719
17	34	6'-0"	13.9	1890
18	36	6'-2"	15.2	2068

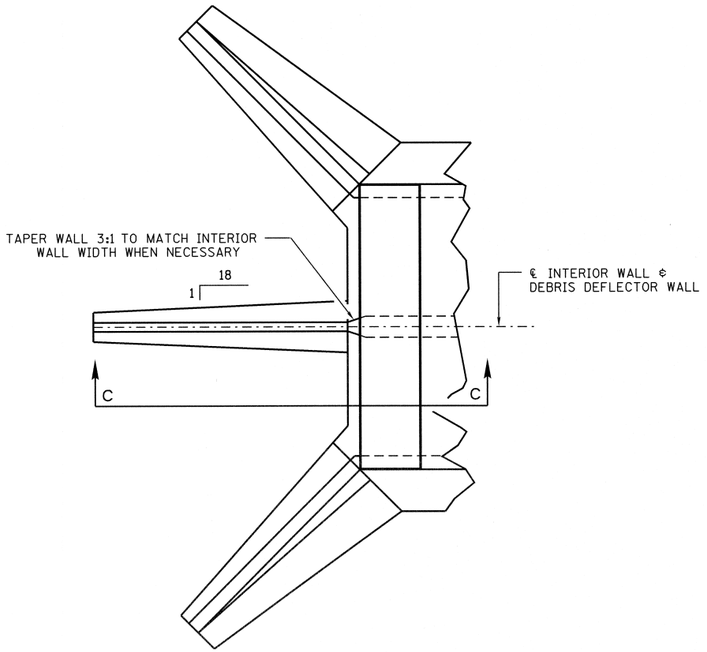

BOX BRIDGE HALF PLAN

(2 BARREL SHOWN; 3 BARREL SIMILAR)
(90° SKEW SHOWN; OTHER SKEWS SIMILAR)

STATE OF TENNESSEE
DEPARTMENT OF TRANSPORTATION

DEBRIS DEFLECTION WALL FOR BOX BRIDGE

STANDARD REINFORCED CONCRETE BRIDGE BOX AND SLAB TYPE

2010

CORRECT Edward P. Wasserman
ENGINEER OF STRUCTURES

STD-17-21

DESIGNED BY CMH / MAH DATE 12-09
DRAWN BY DIANE BUSH DATE 04-10
SUPERVISED BY RLH / JWP / MAH DATE 12-09
CHECKED BY DATE

D:\dgn\std\std176.dgn 28-JUL-2010 14:59