INTERCHANGE MODIFICATION STUDY

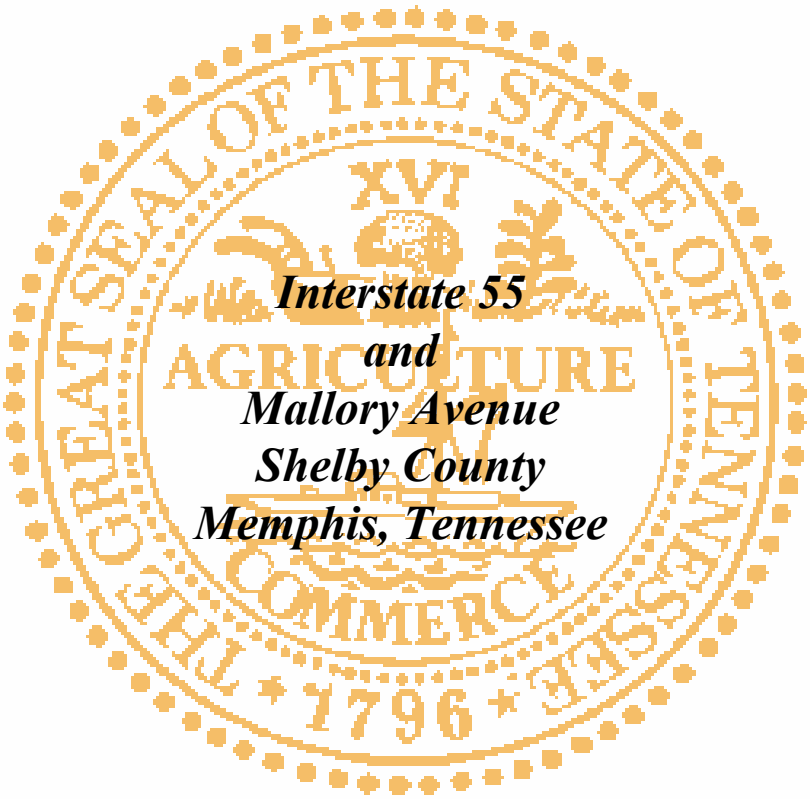

Interstate 55
and
Mallory Avenue
Shelby County
Memphis, Tennessee

PREPARED BY
THOMAS, MILLER & PARTNERS
BRENTWOOD, TENNESSEE
FOR
THE TENNESSEE DEPARTMENT OF TRANSPORTATION
BUREAU OF PLANNING AND DEVELOPMENT

November 2001

TABLE OF CONTENTS

Chapter 1 **Page**

Introduction
- A. Purpose of Study 1
- B. Project Location and Description of Area 1
- C. Relationship to Other Transportation Plans And Programs 6

Chapter 2

Preliminary Planning Data
- A. Land Use 8
- B. Traffic Served 8
- C. Proposed Modifications 9
- D. Discussions of Initial Concepts 12
- E. Environmental Concerns 12

Chapter 3

Engineering Investigations
- A. Traffic Operations 13
- B. Access Analysis 20
- C. Proposed Interchange Design Cost 22

Chapter 4

Summary of Findings and Conclusions 23

Appendix

MAPS

Figure 1: Vicinity Map 2

Figure 2: Project Location Map 3

Figure 3: U.S.G.S. Map 4

Figure 4: SuperTerminal Location Map 7

PHOTOS

Photo 1: Aerial picture of the I-55 and Mallory Avenue Interchange 5

Photo 2: Riverside Drive traveling northbound crossing to I-55 6

Photo 3: Riverport Road East of I-55 towards Mallory Avenue 10

Photo 4: Riverport Road West of I-55 towards Mallory Avenue 10

Photo 5: Intersection of Mallory Avenue and Riverport Road 11

APPENDIX

Appendix A: Traffic Volumes: 2005 and 2025 DHV's

Appendix B: Level of Service: Existing and Proposed

Appendix C: Capacity Analysis: Existing Conditions

Appendix D: Capacity Analysis: Proposed Modifications

Appendix E: Cost Estimates

Appendix F: Functional Plans

Appendix G: Alternatives for Improvements Considered

CHAPTER 1

Introduction

A. Purpose of Study

The purpose of this study is to evaluate the existing interchange at Interstate 55 and Mallory Avenue, and to request approval for the modification of this interchange. It is anticipated that this interchange would serve as the main access point for the proposed Super Terminal, which is to be located southwest of the Mallory Avenue interchange. This study was conducted to:

- Determine any operational deficiencies in the current interchange.
- Develop the needed interchange improvements to provide the desired level of service for the design year.
- Improve the access and safety within the interchange area.
- Evaluate operational characteristics of the proposed improvements for the current conditions (2005) and the design year (2025).
- Develop construction cost estimates and evaluate the land use impacts of the construction.

B. Project Location and Description of the Area

The I-55 & Mallory Avenue interchange is located in the western portion of Memphis near the Tennessee-Arkansas state line (Mississippi River), as shown in Figure 1. The interchange is located along I-55 approximately 0.7 miles northwest of the I-55 and US-61 interchange and 1.2 miles south of the I-55 and South Parkway interchange.

This section of Interstate 55 is currently a six-lane median-divided access controlled facility within the vicinity of the Mallory Avenue interchange. Within the vicinity of the subject interchange, I-55 was constructed in the mid 1960's with geometric design that does not meet the current Federal or state standards. The existing I-55/Mallory Avenue interchange is a partial cloverleaf design with loop ramps to I-55 located in the southeast and northwest quadrants of the interchange. In the mid 70's, the north and southbound entrance ramps were modified to allow for left turning vehicles from Mallory Lane to enter interstate 55.

With this modification, duplicate movements are now provided for these I-55 entrance ramps. It appears that these ramp terminal modifications were done due to the heavy truck traffic forced to utilize the low design speed loop ramps.

A large percentage (25% ADT) of truck traffic currently travel this portion of I-55 including the Mallory Avenue and Riverport Road corridors. (See Figure 3)

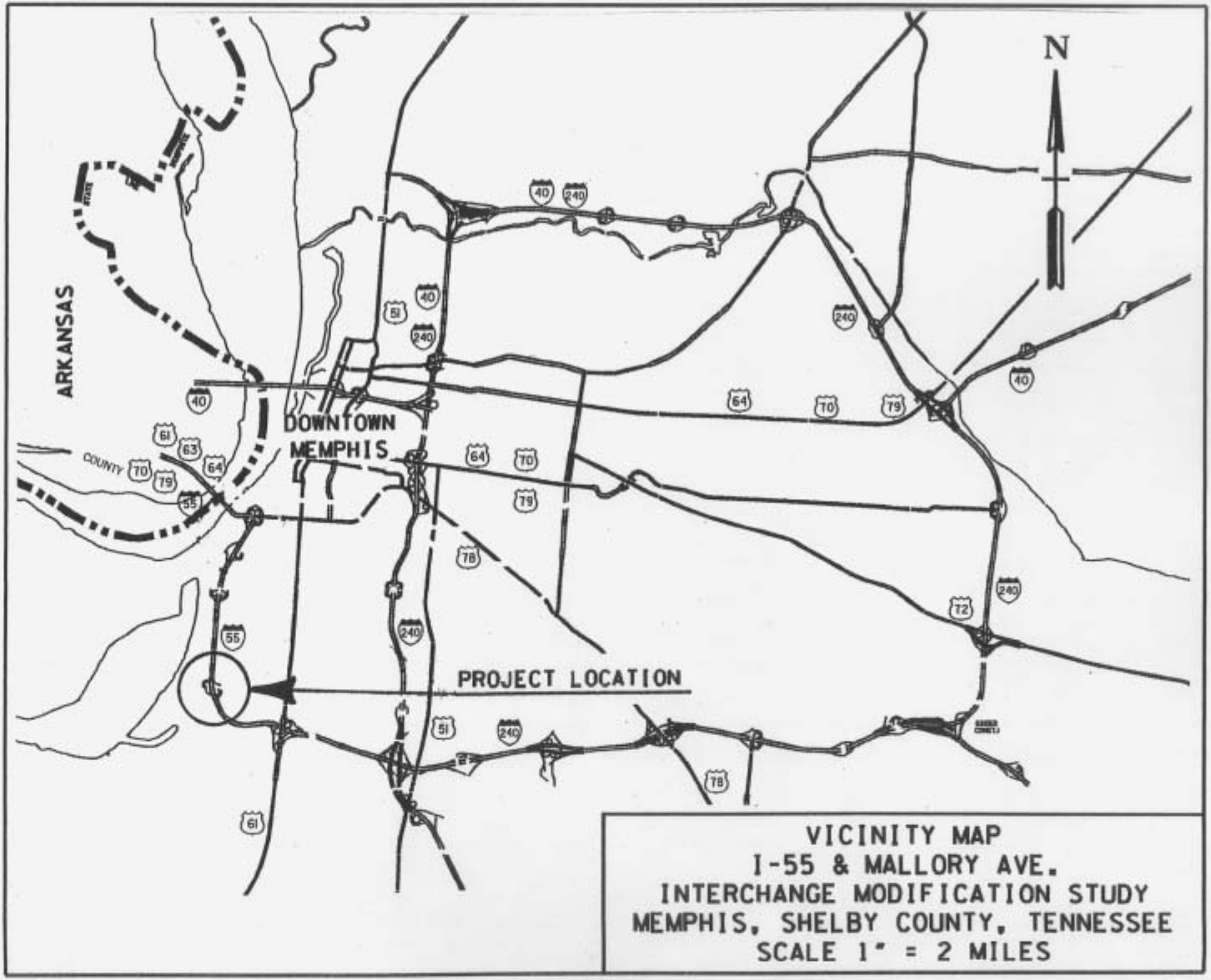
N
ARKANSAS
DOWNTOWN
MEMPHIS
PROJECT LOCATION
40
240
51
64
70
79
63
61
55
78
72
VICINITY MAP
I-55 & MALLORY AVE.
INTERCHANGE MODIFICATION STUDY
MEMPHIS, SHELBY COUNTY, TENNESSEE
SCALE 1" = 2 MILES

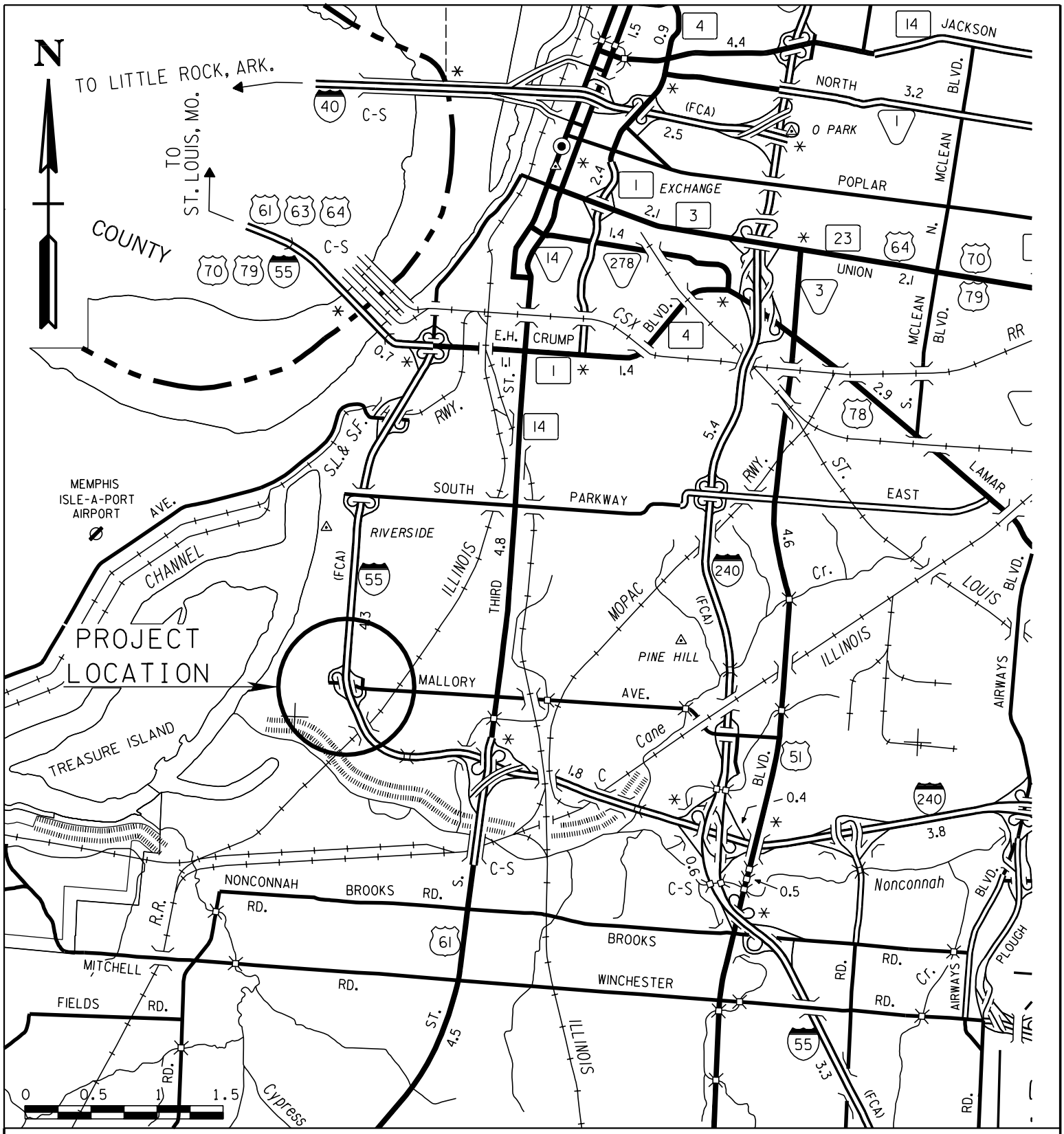

FIGURE 2
I-55 & MALLORY AVE.
INTERCHANGE MODIFICATION STUDY
MEMPHIS, SHELBY COUNTY, TENNESSEE
SCALE 1" = 1 MILE

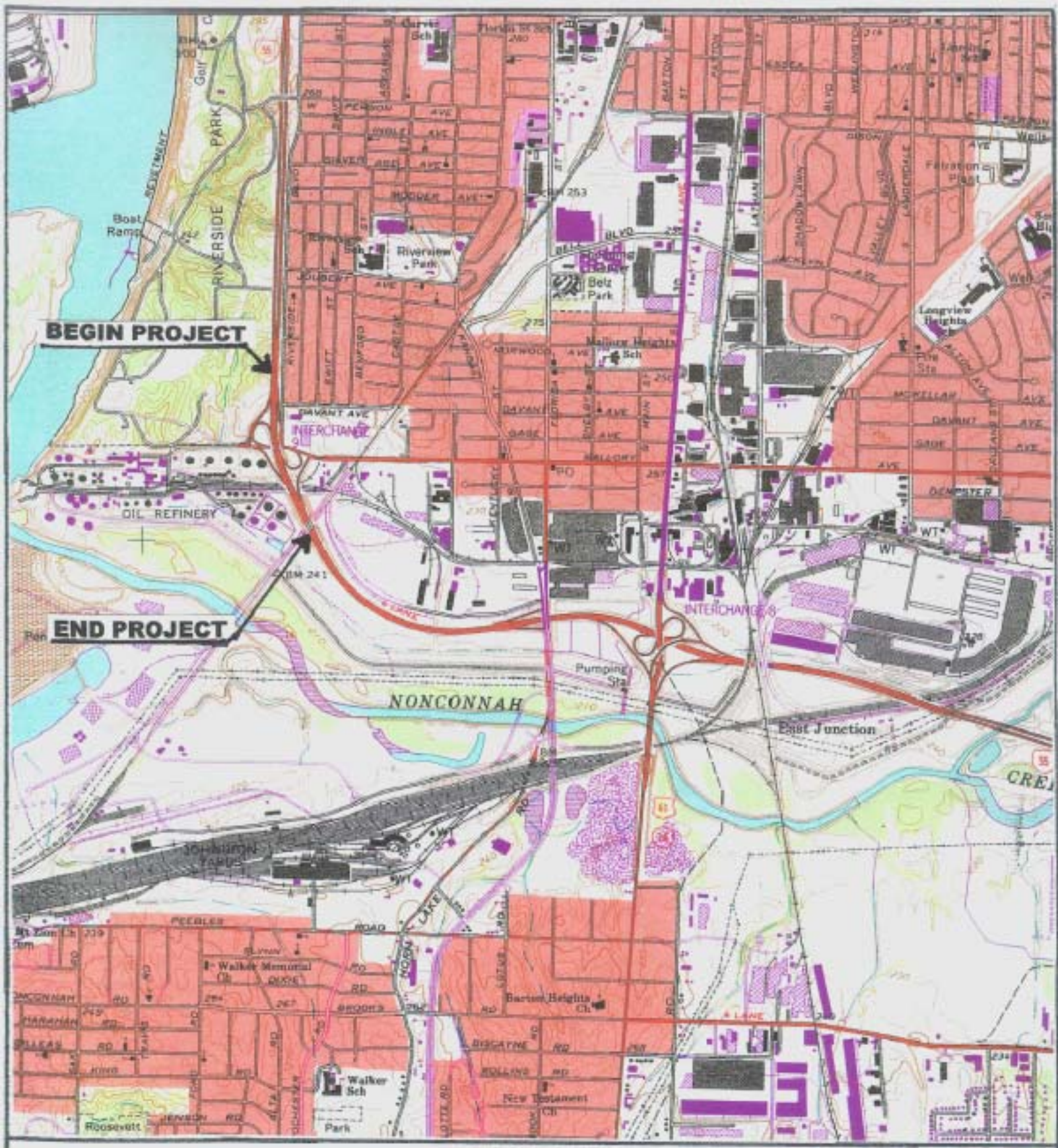

FIGURE 3
I-55 & MALLORY AVE.
INTERCHANGE MODIFICATION STUDY
MEMPHIS, SHELBY COUNTY, TENNESSEE
SCALE 1" = 2000'

Photo 1: Aerial picture of the I-55 and Mallory Avenue Interchange

Considerable congestion occurs on both of the entrance loop ramps and the mainline of I-55 due to three primary reasons:

1. Minimal design speed entrance ramps to I-55
2. Heavy truck traffic (25%)
3. Lack of sufficient merge distance for the southbound entrance loop ramp (500')

A significant safety hazard also exists for motorists using the northbound entrance ramp to I-55 via Riverside Drive. As shown in the lower left of Photo 1, motorists are required to travel northward along this two-way local street and then forced to cross on-coming traffic to enter I-55. Photo 2 on the following page more clearly shows the unsafe situation that exists.

Photo 2: Riverside Drive traveling northbound crossing to I-55

C. Relationship to Other Highway Improvement Programs and Plans

The local officials with the City of Memphis, Shelby County, as well as various public and private partners are developing plans to construct a multi-modal facility (Super Terminal) southwest of the subject interchange (See Figure 4). This facility would provide interface and transfer between trucks, rail and barge traffic in one central location. It is anticipated that this development could significantly increase the heavy vehicle traffic currently using the I-55 and Mallory Avenue interchange, as well as other local roads in the area, including Riverport Road.

There are no plans to provide HOV lanes or widen I-55 within this area based upon the current long-range plans. There is also no commuter rail or light rail transit available in this region; however, a limited trolley system operates in the central business district of Memphis.

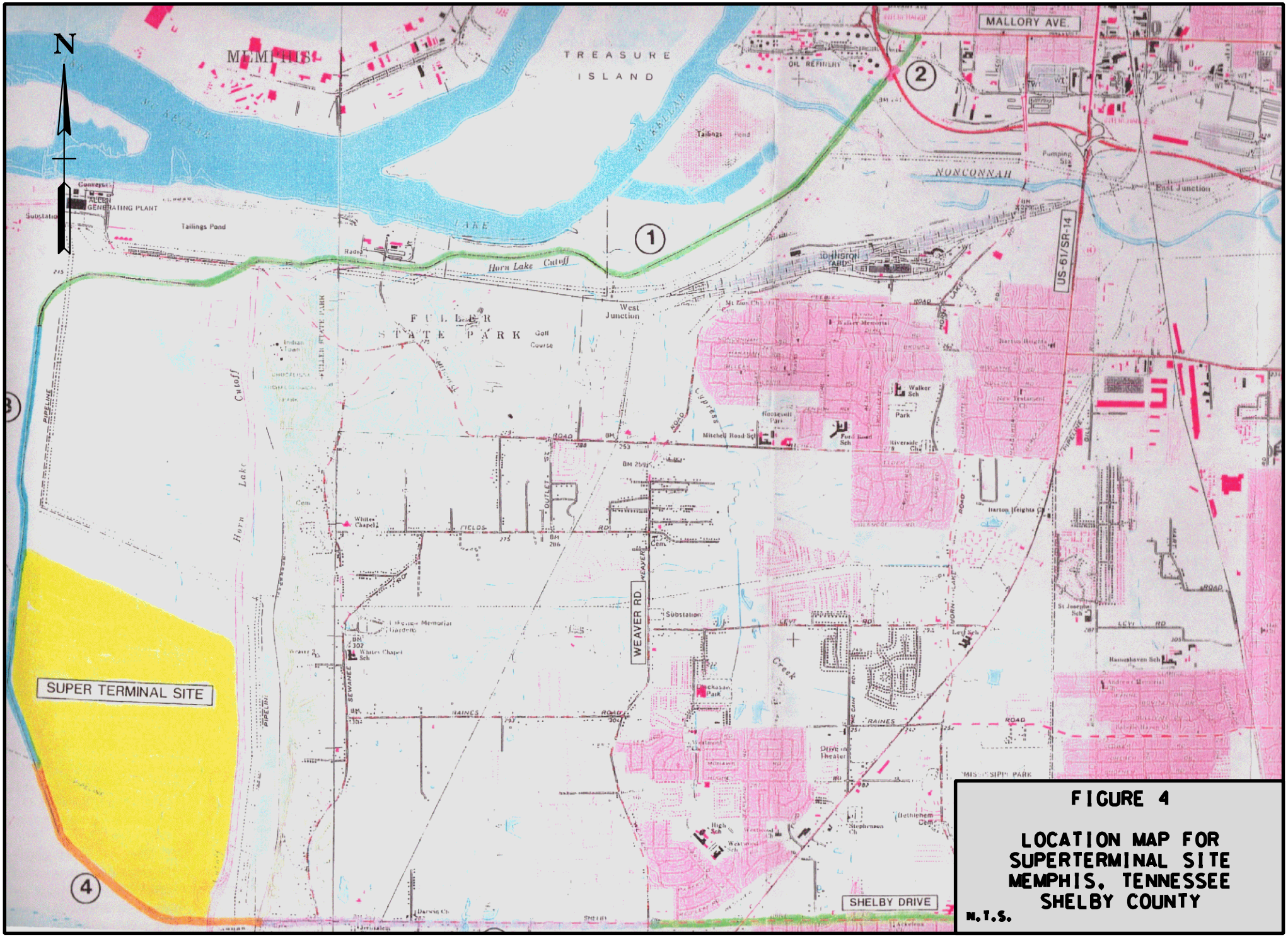

FIGURE 4

LOCATION MAP FOR SUPERTERMINAL SITE MEMPHIS, TENNESSEE SHELBY COUNTY

N.T.S.

CHAPTER 2

Preliminary Planning Data

A. Land Use

As previously stated, industrial development is located within the interchange area, as well as M.L. King Riverside Park in the northwest quadrant of the interchange. North of Mallory Avenue and adjacent to the industrial/commercial businesses, lies a densely populated residential area. Access to this area from the south is primarily provided by Riverside Drive, which parallels I-55 along the eastside. It is important to note that Photo 2 depicts the primary route by which local access to this residential area is provided and which safety is a considerable concern.

The current configuration of the I-55 and Mallory Avenue interchange also contains several geometric deficiencies that impact the safety and operation of the overall transportation system. Included within the system is Mallory Avenue and Riverport Road which extends southwest towards the future Super Terminal. The duplicate movements provided for within the interchange vicinity introduces additional conflict points along Mallory Avenue, as well as merging hazards due the vehicles types and speed differentials present on I-55.

B. Traffic Served

The traffic data for this study was supplied by the Tennessee Department of Transportation (TDOT) and was based on proposed land use and existing conditions. The Design Hourly Volumes (DHV) for the years 2005 and 2025 are shown in Appendix A.

Interstate 55 is currently a six-lane section between the adjacent interchanges of South Parkway and Florida Street. The year 2005 peak hour volumes are over 3,100 vehicles per hour in each direction. In the design year (2025), the DHV's are anticipated to grow to approximately 4,600 vehicles per hour in each direction. The design year volumes along the mainline of I-55 will result in a LOS F for this six-lane facility.

The figures in Appendix A provide a complete breakdown of traffic volumes for the subject interchange and the adjacent interchanges for the base year (2005) and the design year (2025).

C. Proposed Modifications

Based upon detailed study of various alternatives to improving this interchange, it was determined that a single point urban interchange (SPUI) provides the most comprehensive solution. The proposed modifications for the I-55 and Mallory Avenue interchange will improve traffic operations and safety within the area, as well as provide for improved access for both the residential area towards the north and the future Super Terminal to the southwest.

In order to provide for the turning movements associated with a SPUI, the existing structure over I-55 will need to be replaced. Both of the existing loop ramps in the northwest and southeast quadrants would be removed and a new signal installed underneath I-55 to control all of the left turning vehicles to/from Mallory Avenue and I-55. To construct these new ramps, retaining walls will be utilized in each of the four quadrants with minor right-of-way required in the southeast portion of the interchange (Mapco Refinery) and the northeast quadrant of the interchange. These acquisitions are required due to the heavy volumes traveling west (two-lane ramp) on Mallory Avenue to southbound I-55 and westbound on Mallory Avenue to northbound I-55.

Along with the new structure over Mallory Avenue, widening of the existing I-55 mainline bridges over the I.C.R.R. will also be required. Due to the geometry of the existing northbound I-55 exit ramp bridge, it is also recommended that this structure be replaced to allow for the new ramp design to Mallory Avenue. Adequate vertical clearance exists at this location for this construction.

As part of this modification, it is also recommended that the existing segment of Riverside Drive that extends north from Mallory Avenue along the eastside of I-55 be closed and replaced with a new connector road at the intersection of Mallory Avenue and Riverport Road. This new connection will provide for a safer situation for motorists as well as improve the overall operation within the interchange area.

Riverport Road

Since Riverport Road will continue to serve the industrial development in the southwest quadrant of the study area, as well as the primary access point to the future Super Terminal, some road improvements are also recommended as part of this study.

Photo 3 on the following page shows the existing Riverport Road along the eastside of I-55. This roadway is currently forty-eight (48) feet in width with the I.C.R.R. paralleling the southeast margin of the road.Vertical sight distance deficiencies currently exist along Riverport Road underneath the I-55 bridge as shown in Photo 4.

Photo 3: Riverport Road East of I-55 towards Mallory Avenue

Photo 4: Riverport Road West of I-55 towards Mallory Avenue

Before this road was constructed, this bridge originally served to span the railroad solely. Several years ago the rail-line was shifted to the southern span with the new northbound lanes built underneath the center span and the southbound lanes constructed under the north span of the bridge. Photo 4 shows the existing grade difference (six feet) and sight distance constraints along this section of road.

The proposed improvements on Riverport Road consists of widening to five(5) travel lanes with a replacement structure built over Riverport Road to span the existing railroad and new travel lanes.

At the intersection of Mallory Avenue and Riverport Road, some modifications will be required, due to the additional travel lanes on Riverport Road as well as the new connector road to the north. Photo 5 shows the approach of the proposed connector road at the Mallory Avenue/Riverport Road intersection. This intersection would operate as a signalized intersection with safety controls recommended such as gates and lights due to the close proximity of the at—grade railroad crossing to the east of the intersection. It is also recommended that signal preemption be incorporated as part of this signalization to avoid unsafe queuing of vehicles over the railroad tracks.

As part of the intersection improvements at Riverport Road and Mallory Avenue, it is also recommended that an alternative driveway (access point) be considered for the truck service station located in the southwest quadrant of the intersection.

Photo 5: Intersection of Mallory Avenue and Riverport Road

D. Discussion of Initial Concepts

Several alternatives to improve the safety and operational inadequacies of the existing I-55 and Mallory Avenue interchange were assessed. Below is a summary of the various alternatives investigated for this interchange. (See Appendix G for plans for these alternatives)

Alternate A

This alternative would have eliminated the existing entrance loop ramps from Mallory Avenue to I-55. Since these movements are provided for by the other ramps, this option seemed the most logical. Also recommended with this alternative, was the closure of Riverside Drive near the I-55 northbound entrance ramp. A new connector road would be constructed at the intersection of Mallory Avenue and Riverport Road.

Alternate B

Alternate B was developed to allow the existing Riverside Drive to remain open with the northbound and southbound tangent ramps from Mallory Avenue to I-55 being abandoned. In order to allow for left turning vehicles to continue to enter the interstate, modification of the loop ramps was also recommended. No new connector road would be required, since the existing Riverside Drive was to be maintained.

Alternate C

This alternative would have eliminated the loop ramp located in the northwest quadrant of the interchange and also closed the I-55 northbound tangent ramp. The existing I-55 southbound exit ramp to Mallory Avenue would also be modified to facilitate more efficient turning movements. The remaining loop ramp terminal at Mallory Avenue would be modified to allow for westbound traffic to turn onto this ramp.

Alternate D

The final alternative investigated is also the one detailed in this study. It was found that the single point urban interchange provided the best overall operation of the roadway system compared with the previous alternatives. Several safety concerns could be addressed with this recommended alternative, including issues related to access.

E. Environmental Concerns

The Tennessee Department of Transportation will perform all necessary studies including ecological and historical studies.

At the current time, the proposed design does not appear to impact any areas of environmental or historical significance. A substantial portion of this project would be constructed within the existing right-of-way.

CHAPTER 3

Engineering Investigations

A. Traffic Operations

An initial analysis was made which determined that the existing interchange configuration was in adequate to handle design year volumes. Appendix B contains figures summarizing the levels-of-service under the existing conditions for 2005 and 2025 traffic. The levels-of-service were determined using the peak hour volumes which represent the worst case condition for each location.

Existing Roadway Network

The results of the capacity analyses conducted for the existing roadway network are shown in the following tables. Specifically, Table 1 includes the capacity analyses of ramp junctions that will not result in a lane addition or a lane drop. As shown in Table 1, only one ramp junction within the study area is projected to operate at poor LOS in the Year 2005, based on the existing roadway network. Specifically, the junction of southbound I-55 and the northern on-ramp from Mallory Avenue is projected to operate at LOS F during the PM peak hour.

The following ramp junctions are expected to operate at poor Level of Service in the Year 2025, based on the existing roadway network.

- Northbound I-55 and the off-ramp to South Parkway (LOS F during the AM)
- Northbound I-55 and the on-ramp from South Parkway (LOS F during the AM)
- Southbound I-55 and the off-ramp to South Parkway (LOS E during the PM)
- Southbound I-55 and the on-ramp from South Parkway (LOS F during the PM)
- Northbound I-55 and the n. on-ramp from Mallory Ave. (LOS F during the PM)
- Southbound I-55 and the n. on-ramp from Mallory Ave. (LOS F during both AM/PM)
- Eastbound I-55 and the off-ramp to Florida Avenue (LOS F during the PM)
- Westbound I-55 and the on-ramp from Florida Avenue (LOS F during the AM

As noted within Table 1, several locations within the study area include an interchange ramp that is associated with a lane addition or a lane drop on I-55. These locations are as follows:

- Northbound I-55 at the off-ramp to Mallory Avenue,
- Northbound I-55 at the southern on-ramp from Mallory Avenue,
- Southbound I-55 at the off-ramp to Mallory Avenue, and
- Southbound I-55 at the southern on-ramp from Mallory Avenue.

The information in Exhibit 13-20 of HCM2000 indicates that the service volume of a single-lane ramp is approximately 1,760 vehicles per hour. Table 2 includes the projected traffic volumes on each ramp, which results in a lane addition or lane drop on I-55 at the interchanges within the study area.

The results of these analyses indicate that all of the ramps which currently result in a lane addition or a lane drop on I-55 have adequate capacity to accommodate the traffic volumes projected on the existing roadway network in the Years 2005 and 2025.

TABLE 1

CAPACITY ANALYSES OF RAMP JUNCTIONS WITHIN THE STUDY AREA

Ramp Junctions	Year 2005	Year 2025
N/B I-55 and off-ramp to South Parkway (AM)	D	F
N/B I-55 and off-ramp to South Parkway (PM)	C	D
N/B I-55 and on-ramp from South Parkway (AM)	C	F
N/B I-55 and on-ramp from South Parkway (PM)	C	D
S/B I-55 and off-ramp to South Parkway (AM)	C	D
S/B I-55 and off-ramp to South Parkway (PM)	C	E
S/B I-55 and on-ramp from South Parkway (AM)	C	D
S/B I-55 and on-ramp from South Parkway (PM)	C	F
N/B I-55 and off-ramp to Mallory Avenue (AM)	see note	see note
N/B I-55 and off-ramp to Mallory Avenue (PM)	see note	see note
N/B I-55 and southern on-ramp from Mallory Avenue (AM)	see note	see note
N/B I-55 and southern on-ramp from Mallory Avenue (PM)	see note	see note
N/B I-55 and northern on-ramp from Mallory Avenue (AM)	C	F
N/B I-55 and northern on-ramp from Mallory Avenue (PM)	C	D
S/B I-55 and off-ramp to Mallory Avenue (AM)	see note	see note
S/B I-55 and off-ramp to Mallory Avenue (PM)	see note	see note
S/B I-55 and northern on-ramp from Mallory Avenue (AM)	D	F
S/B I-55 and northern on-ramp from Mallory Avenue (PM)	F	F
S/B I-55 and southern on-ramp from Mallory Avenue (AM)	see note	see note
S/B I-55 and southern on-ramp from Mallory Avenue (PM)	see note	see note
E/B I-55 and off-ramp to Florida Avenue (AM)	C	D
E/B I-55 and off-ramp to Florida Avenue (PM)	D	F
W/B I-55 and on-ramp from Florida Avenue (AM)	D	F
W/B I-55 and on-ramp from Florida Avenue (PM)	C	D

Note: *Some ramp junctions within the study area result in a lane addition or lane drop. The Highway Capacity Manual 2000 (HCM2000) states that in these cases, the capacity of the ramp is governed by the ramp geometry itself and not the ramp-freeway junction. Analyses for these locations are shown in Table 2.*

TABLE 2

CAPACITY ANALYSES AT RAMP JUNCTIONS
WHICH RESULT IN A LANE ADDITION OR LANE DROP

Location	Capacity (vph)	Year 2005		Year 2025	
		AM Peak (vph)	PM Peak (vph)	AM Peak (vph)	PM Peak (vph)
Northbound I-55 at the off-ramp to Mallory Avenue	1,760	532	276	1,185	615
Northbound I-55 at the s. on-ramp from Mallory Avenue	1,760	9	13	10	16
Southbound I-55 at the off-ramp to Mallory Avenue	1,760	301	155	917	461
Southbound I-55 at the s. on-ramp from Mallory Avenue	1,760	327	551	546	920

Currently no weaving sections are found within the study area because of the way that the existing interchanges are configured. Specifically, at the interchange with South Parkway, the off-ramps are located before the on-ramps in each direction of travel. Therefore, motorists exiting the interstate onto South Parkway do not have to cross paths with motorists entering the interstate segment from South Parkway.

In addition, there are no weaving sections currently found at the interchange with Mallory Avenue because several of the ramps result in lane additions and lane drops on mainline I-55. Also, as is the case at South Parkway, off-ramps are located before on-ramps in each direction of travel.

Finally, there are no weaving sections found at the interchange with Florida Avenue because this location is a partial interchange that does not include access to or from Florida Avenue for westbound / northbound motorists on I-55.

The results of the capacity analyses for the freeway segments within the study area are shown in Table 3. These results indicate that only one freeway segment within the study area is projected to operate at unacceptable LOS in the Year 2005, based on the existing roadway network: Specifically, Southbound I-55, between Mallory Avenue and Florida Avenue, is expected to operate at LOS E during the PM peak hour, based on the existing roadway network.

In the Year 2025, the majority of the freeway segments within the study area are projected to operate at poor LOS during both peak hours, based on the existing roadway network. However, the following roadway segments are expected to remain at acceptable levels in the Year 2025:

- Eastbound I-55, east of Florida Ave. (AM Peak Hour),
- Westbound I-55, east of Florida Ave. (PM Peak Hour).

TABLE 3

CAPACITY ANALYSES OF FREEWAY SEGMENTS WITHIN THE STUDY AREA

Freeway Segments	Year 2005	Year 2025
Northbound I-55, north of S. Parkway (AM Peak Hour)	D	F
Northbound I-55, north of S. Parkway (PM Peak Hour)	C	E
Southbound I-55, north of S. Parkway (AM Peak Hour)	C	E
Southbound I-55, north of S. Parkway (PM Peak Hour)	D	E
Northbound I-55, between S. Parkway and Mallory Avenue (AM Peak Hour)	D	F
Northbound I-55, between S. Parkway and Mallory Avenue (PM Peak Hour)	C	E
Southbound I-55, between S. Parkway and Mallory Avenue (AM Peak Hour)	C	E
Southbound I-55, between S. Parkway and Mallory Avenue (PM Peak Hour)	D	F
Northbound I-55, between Mallory Ave. and Florida Ave. (AM Peak Hour)	D	F
Northbound I-55, between Mallory Ave. and Florida Ave. (PM Peak Hour)	C	E
Southbound I-55, between Mallory Ave. and Florida Ave. (AM Peak Hour)	C	E
Southbound I-55, between Mallory Ave. and Florida Ave. (PM Peak Hour)	E	F
Eastbound I-55, east of Florida Ave. (AM Peak Hour)	C	D
Eastbound I-55, east of Florida Ave. (PM Peak Hour)	D	E
Westbound I-55, east of Florida Ave. (AM Peak Hour)	D	E
Westbound I-55, east of Florida Ave. (PM Peak Hour)	C	D

PROPOSED ROADWAY NETWORK

The results of the capacity analyses conducted for the proposed roadway network are shown in the following tables. Specifically, Table 4 includes the capacity analyses of ramp junctions. As shown, only one ramp junction within the study area is projected to operate at poor LOS in the Year 2005, based on the proposed roadway network. Specifically, the junction of southbound I-55 and the northern on-ramp from Mallory Avenue is projected to operate at LOS F during the PM peak hour.

The following ramp junctions are expected to operate at poor Level of Service in the Year 2025, based on the proposed roadway network.

- Northbound I-55 and the off-ramp to South Parkway (LOS F during the AM)
- Northbound I-55 and the on-ramp from South Parkway (LOS F during the AM)
- Southbound I-55 and the off-ramp to South Parkway (LOS E during the PM)
- Southbound I-55 and the on-ramp from South Parkway (LOS F during the PM)
- Northbound I-55 and the n. on-ramp from Mallory Ave. (LOS F during the PM)

- Southbound I-55 and the n. on-ramp from Mallory Ave. (LOS F during AM/PM)
- Eastbound I-55 and the off-ramp to Florida Avenue (LOS F during the PM)
- Westbound I-55 and the on-ramp from Florida Avenue (LOS F during the AM)

TABLE 4

CAPACITY ANALYSES OF RAMP JUNCTIONS WITHIN THE STUDY AREA

Ramp Junctions	Year 2005	Year 2025
N/B I-55 and off-ramp to South Parkway (AM)	D	F
N/B I-55 and off-ramp to South Parkway (PM)	C	D
N/B I-55 and on-ramp from South Parkway (AM)	C	F
N/B I-55 and on-ramp from South Parkway (PM)	C	D
S/B I-55 and off-ramp to South Parkway (AM)	C	D
S/B I-55 and off-ramp to South Parkway (PM)	C	E
S/B I-55 and on-ramp from South Parkway (AM)	C	D
S/B I-55 and on-ramp from South Parkway (PM)	C	F
N/B I-55 and off-ramp to Mallory Avenue (AM)	D	F
N/B I-55 and off-ramp to Mallory Avenue (PM)	C	D
N/B I-55 and on-ramp from Mallory Avenue (AM)	C	F
N/B I-55 and on-ramp from Mallory Avenue (PM)	C	D
S/B I-55 and off-ramp to Mallory Avenue (AM)	C	D
S/B I-55 and off-ramp to Mallory Avenue (PM)	C	F
S/B I-55 and on-ramp from Mallory Avenue (AM)	C	D
S/B I-55 and on-ramp from Mallory Avenue (PM)	C	F
E/B I-55 and off-ramp to Florida Avenue (AM)	C	D
E/B I-55 and off-ramp to Florida Avenue (PM)	D	F
W/B I-55 and on-ramp from Florida Avenue (AM)	D	F
W/B I-55 and on-ramp from Florida Avenue (PM)	C	D

As with the existing roadway network, no weaving sections are found within the proposed roadway network because of the way that the existing interchanges are configured. Specifically, at the interchange with South Parkway, the off-ramps will remain positioned before the on-ramps in each direction of travel. Therefore, motorists exiting the interstate onto South Parkway do not have to cross paths with motorists entering the interstate segment from South Parkway.

In addition, there will be no weaving sections at the interchange with Mallory Avenue not only because off-ramps are located before on-ramps in each direction of travel, but also because the spacing between the proposed ramp locations exceeds the distance that defines a weaving section.

Finally, there are no weaving sections found at the interchange with Florida Avenue because this location is a partial interchange that does not include access to or from Florida Avenue for westbound / northbound motorists on I-55.

The results of the capacity analyses for the freeway segments within the study area are shown in Table 5. These results indicate that only one freeway segment within the study area is projected to operate at unacceptable LOS in the Year 2005, based on the existing roadway network: Specifically, Southbound I-55, between Mallory Avenue and Florida Avenue, is expected to operate at LOS E during the PM peak hour, based on the existing roadway network.

In the Year 2025, the majority of the freeway segments within the study area are projected to operate at poor LOS during both peak hours, based on the existing roadway network. However, the following roadway segments are expected to remain at acceptable levels in the Year 2025:

- Eastbound I-55, east of Florida Ave. (AM Peak Hour),
- Westbound I-55, east of Florida Ave. (PM Peak Hour).

TABLE 5

CAPACITY ANALYSES OF FREEWAY SEGMENTS WITHIN THE STUDY AREA

Freeway Segments	Year 2005	Year 2025
Northbound I-55, north of S. Parkway (AM Peak Hour)	D	F
Northbound I-55, north of S. Parkway (PM Peak Hour)	C	E
Southbound I-55, north of S. Parkway (AM Peak Hour)	C	E
Southbound I-55, north of S. Parkway (PM Peak Hour)	D	E
Northbound I-55, between S. Parkway and Mallory Avenue (AM Peak Hour)	D	F
Northbound I-55, between S. Parkway and Mallory Avenue (PM Peak Hour)	C	E
Southbound I-55, between S. Parkway and Mallory Avenue (AM Peak Hour)	C	E
Southbound I-55, between S. Parkway and Mallory Avenue (PM Peak Hour)	D	F
Northbound I-55, between Mallory Ave. and Florida Ave. (AM Peak Hour)	D	F
Northbound I-55, between Mallory Ave. and Florida Ave. (PM Peak Hour)	C	E
Southbound I-55, between Mallory Ave. and Florida Ave. (AM Peak Hour)	C	E
Southbound I-55, between Mallory Ave. and Florida Ave. (PM Peak Hour)	E	F
Eastbound I-55, east of Florida Ave. (AM Peak Hour)	C	D
Eastbound I-55, east of Florida Ave. (PM Peak Hour)	D	E
Westbound I-55, east of Florida Ave. (AM Peak Hour)	D	E
Westbound I-55, east of Florida Ave. (PM Peak Hour)	C	D

Capacity analyses were conducted for the new single point urban interchange configuration that is proposed for Mallory Avenue within the proposed roadway network. For the purposes of these analyses, the following assumptions were made:

- a SPUI configuration would be provided for the I-55 interchange ramps at Mallory Avenue,
- a new traffic signal will be installed at the intersection of Mallory Avenue and the I-55 ramps,
- the new traffic signal will include a separate left turn signal phase for each approach,
- all right turns off the exit ramps from I-55 will operate with yield-control conditions rather than be controlled by the traffic signal,
- a separate eastbound left turn lane will be provided on Mallory Avenue for motorists turning onto the on-ramp for northbound / westbound I-55,
- two westbound left turn lanes will be provided on Mallory Avenue for motorists turning onto the on-ramp for southbound / eastbound I-55 and exclusive eastbound right turn lane to northbound I-55,
- two southbound left turn lanes will be provided for motorists turning from the off-ramp from southbound I-55 onto eastbound Mallory Avenue, and
- a single northbound left turn lane will be provided for motorists turning from the off-ramp from northbound I-55 onto westbound Mallory Avenue.

The results of these analyses are shown in Table 6. The analyses show that the new single point urban interchange will not fail in the AM and PM peak hours in the Year 2005 and 2025.

TABLE 6

CAPACITY ANALYSES AT NEW SURFACE STREET INTERSECTIONS

INTERSECTION	Year 2005	Year 2025
Mallory Avenue and I-55 SPUI ramp configuration (AM peak)	B	D
Mallory Avenue and I-55 SPUI ramp configuration (PM peak)	C	E
Mallory Avenue and Riverport Rd/Proposed Connector (AM peak)	B	C
Mallory Avenue and Riverport Rd/Proposed Connector (PM peak)	C	D

B. Access Analysis

This study has been undertaken in accordance with the Federal Highway Administration's (FHWA) policy for granting new or revised interchange access. The FHWA policy, as described in FHWA Docket 98-3460, "Additional Interchanges to the Interstate System (Federal Register 63, No. 28, February 11, 1998) is provided in the following paragraphs accompanied by comments for consideration.

It is in the national interest to maintain the Interstate System to provide the highest level of service in terms of safety and mobility. Adequate control of access is critical to providing such service. Therefore, new or revised access points to the existing Interstate System should meet the following requirements.

1. The existing interchanges and/or local roads and streets in the corridor can neither provide the necessary access nor be improved to satisfactorily accommodate the design year traffic demands while at the same time providing the access intended by the proposal.

With the continual increase in traffic volumes along I-55 within the project area, the merge and diverge movements will continue to diminish the operation of the interstate system in the project area. This degradation will result in increased motorists delay, reduced traveler safety, and reduced air quality within the city of Memphis. No minor interchange improvements can be made (other than the recommended configuration) to eliminate the major problems outlined previously in this report.

2. All reasonable alternatives for design options, location and transportation system management type improvements (such as ramp metering, mass transit, and HOV facilities) have been assessed and provided for if currently justified, or provisions are included for accommodating such facilities if a future need is identified.

There were several different design options developed and assessed in this study to improve the operation of the I-55 and Mallory Avenue interchange. However, the proposed design is the only one that produced the desired level of service and operational characteristics for the interchange.

The proposed modification will be constructed with as little disruption to the adjacent development in the area as any other design option investigated.

3. The proposed access point does not have a significant adverse impact on the safety and operation of the interstate facility based upon an analysis of current and future traffic. The operational analysis for existing conditions shall, particularly in urbanized areas, include an analysis of sections of interstate to and including

at least the first adjacent existing or proposed interchange on either side. Crossroads and other roads and streets shall be included in the analysis to the extent necessary to assure their ability to collect and distribute traffic to and from the interchange with new or revised access points.

The proposed modifications should not have any adverse impact on the safety and operation of the interstate facility. Safety will be improved with the elimination of substandard merge lengths associated with the existing low speed loop ramps.

4. The proposed access connects to a public road only and will provide for all traffic movements. Less than "full interchanges" for special purpose access for transit vehicles, for HOV's, or into park and ride lots may be considered on a case-by-case basis. The proposed access will be designed to meet or exceed current standards for Federal-Aid projects on the Interstate System.

The proposal is a modification of the existing interchange at Interstate 55 and Mallory Avenue. The proposed modification is a "full interchange" and provides safer movements along the mainline of Interstate 55 and the local roadway system. The proposed design will meet or exceed the American Association of State Highway and Transportation Officials (AASHTO) criteria.

5. The proposal considers and is consistent with local and regional land use and transportation plans. Prior to final approval, all requests for new or revised access must be consistent with the metropolitan and/or statewide transportation plan, as appropriate, the applicable provisions of 23 CFR part 450 and the transportation conformity requirements of 40 CFR parts 51 and 93.

The study was coordinated with both the Tennessee Department of Transportation and the City of Memphis. The proposal is consistent with all local, regional, and statewide land use and transportation plans.

6. In areas where the potential exists for future multiple interchange additions, all requests for new or revised access are supported by a comprehensive interstate network study with recommendations that address all proposed and desired access within the context of a long-term plan.

There are no long-range plans for additional interchanges in this area. The existing interchanges provide adequate access to the subject area.

7. The request for a new or revised access generated by a new or expanded development demonstrates appropriate coordination between the development and related or otherwise required transportation system improvements

This interchange modification is intended to correct operational inadequacies of the existing interchange configuration. The request is also generated by future development within the vicinity of the interchange, more specifically the proposed Super Terminal to be located southwest of the subject interchange.

8. The request for a new or revised access contains information relative to the planning requirements and the status of environmental processing of the proposal.

The proposed modifications will be submitted to the TDOT Environmental Department to begin environmental studies at the time this report is submitted to the FHWA.

C. Proposed Interchange Cost

The total cost for this improvement to the I-55 and Mallory Avenue interchange and the Riverport Road area is approximately $12,967,000. An estimated cost breakdown is shown in Appendix E.

CHAPTER 4

Summary of Findings and Conclusions

The purpose of this study was to evaluate the existing interchange at Interstate 55 and Mallory Avenue and to develop proposed improvements to the interchange which could be constructed within current physical constraints and provide a desirable level of service for the design year traffic.

The traffic analysis indicates that the existing interchange is inadequate to handle the current and design year traffic volumes. The current configuration and the associated merge and diverge problems severely congest this area.

The proposed redesign of the I-55 and Mallory Avenue interchange area will provide safety for motorists traveling through this corridor as well as facilitate the large number of heavy trucks that presently use this roadway. Additional access and capacity will also be provided with the necessary improvements to Riverport Road and the proposed connector road towards the north from the Mallory Avenue intersection.

Traffic operations will be improved with most movements operating at a desirable level of service. As stated previously, in order for all the movements to operate at an acceptable LOS, the mainline of I-55 would require one additional mainline travel lane in each direction. This widening falls outside the scope of this improvement project.

APPENDIX A

TRAFFIC VOLUMES: 2005 AND 2025 DHV'S

TENNESSEE DEPARTMENT OF TRANSPORTATION (REV. 10/12/99)
MAPPING AND STATISTICS OFFICE
TRAFFIC AND SAFETY PLANNING SECTION

PROJECT NO.: _____ ROUTE: I-55
COUNTY: SHELBY CITY: MEMPHIS
PROJECT DESCRIPTION: INTERCHANGE MODIFICATION STUDY.

DIVISION REQUESTING:

MAINTENANCE	☐	PUBLIC TRANS. & AERO.	☐
PLANNING	☒	STRUCTURES	☐
PAVEMENT DESIGN	☐	SURVEY & DESIGN	☐
PROG. DEVELOPMENT & ADM.	☐	OTHER _____	☐

YEAR PROJECT PROGRAMMED FOR CONSTRUCTION: _____
PROJECTED LETTING DATE: _____

TRAFFIC ASSIGNMENT:

BASE YEAR		DESIGN YEAR					DESIGN ROADWAY % TRUCKS		DESIGN AVERAGE DAILY LOADS	
ADT	YEAR	ADT	DHV	%	YEAR	DIR.DIST.	DHV	ADT	FLEX	RIGID
65,320	2005	96,640	9,664	10	2025	55-45	17	25		

REQUESTED BY: NAME MATT ASHBY DATE 3/16/01
DIVISION PLANNING
ADDRESS SUITE 900 JAMES K. POLK BLDG.
NASHVILLE, TN 37243

REVIEWED BY: STEVE ALLEN Steve Allen BHB DATE 03-20-01
TRANSPORTATION MANAGER 1
SUITE 1000, JAMES K. POLK BUILDING

APPROVED BY: BONNIE H. BROTHERS Bonnie H. Brothers DATE 03-20-01
TRANSPORTATION MANAGER 2
SUITE 1000, JAMES K. POLK BUILDING

COMMENTS:

THIS TRAFFIC BASED ON A PREVIOUS PROJECT DATED: 3/16/2000 . FUTURE TRAFFIC BASED ON GROWTH RATES FROM THE MEMPHIS LONG RANGE COMPUTER MODEL.
* INTERCHANGES #5 AND #6 REWORKED FOR DISTRIBUTION WITH ADDITION OF SUPER-TERMINAL. ADL AND DHV INCLUDED.
REPLACES PROJECT DATED: 1/12/2001 PREPARED FOR PLANNING.

DHV'S ARE NOT REQUIRED FOR SIDE ROADS LESS THAN 1000 ADT.

NOTE: FOR BRIDGE REPLACEMENT PROJECTS, ADLs ARE NOT REQUIRED FOR ADTs OF 1000 OR LESS AND PERCENTAGE OF TRUCKS OF 7% OR LESS.

SEE ATTACHMENTS FOR TURNING MOVEMENTS AND/OR OTHER DETAILS.

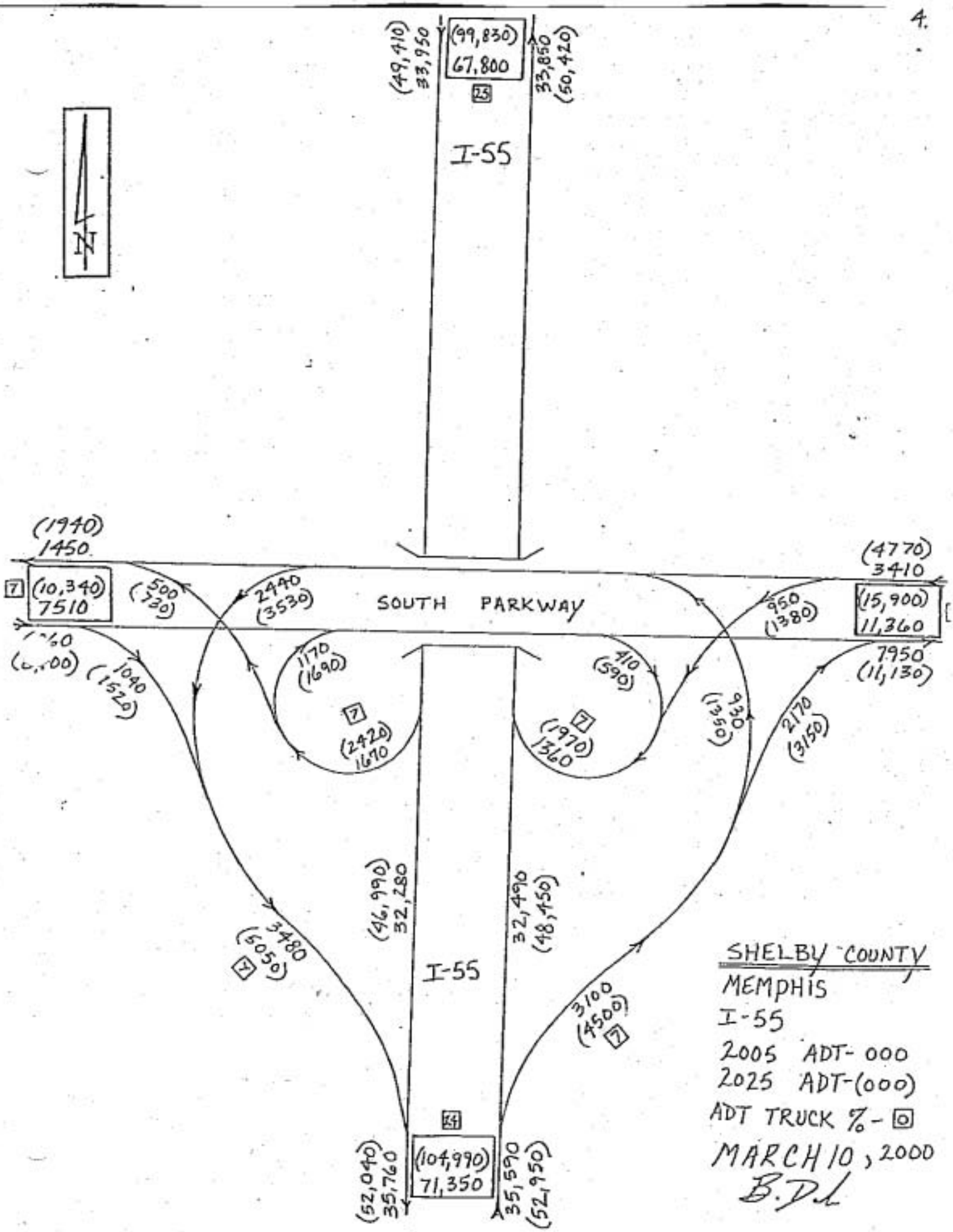

SHELBY COUNTY
MEMPHIS
I-55
2005 ADT- 000
2025 ADT-(000)
ADT TRUCK % - 0
MARCH 10, 2000
B.D.L

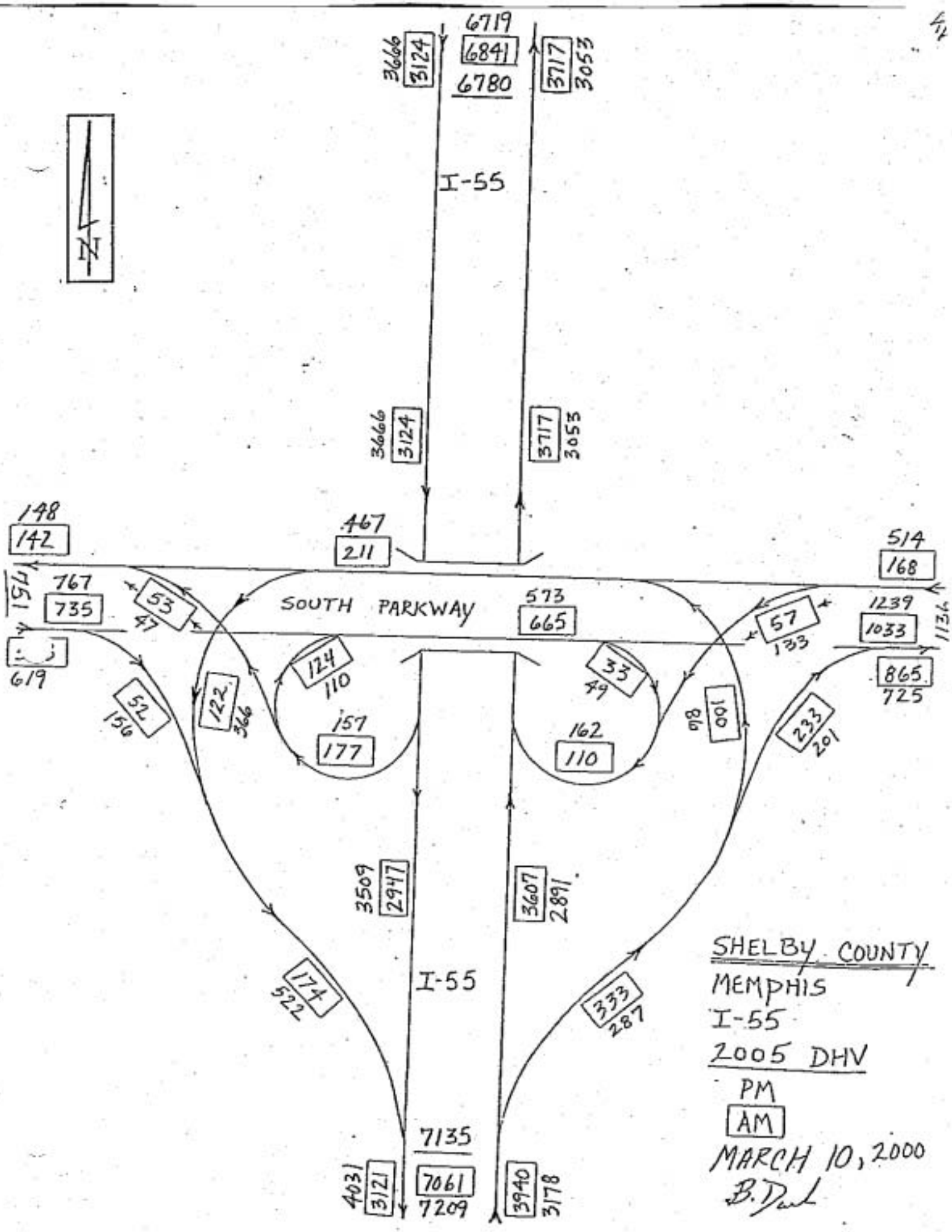

SHELBY COUNTY
MEMPHIS
I-55
2005 DHV
PM
AM
MARCH 10, 2000
B. Dail

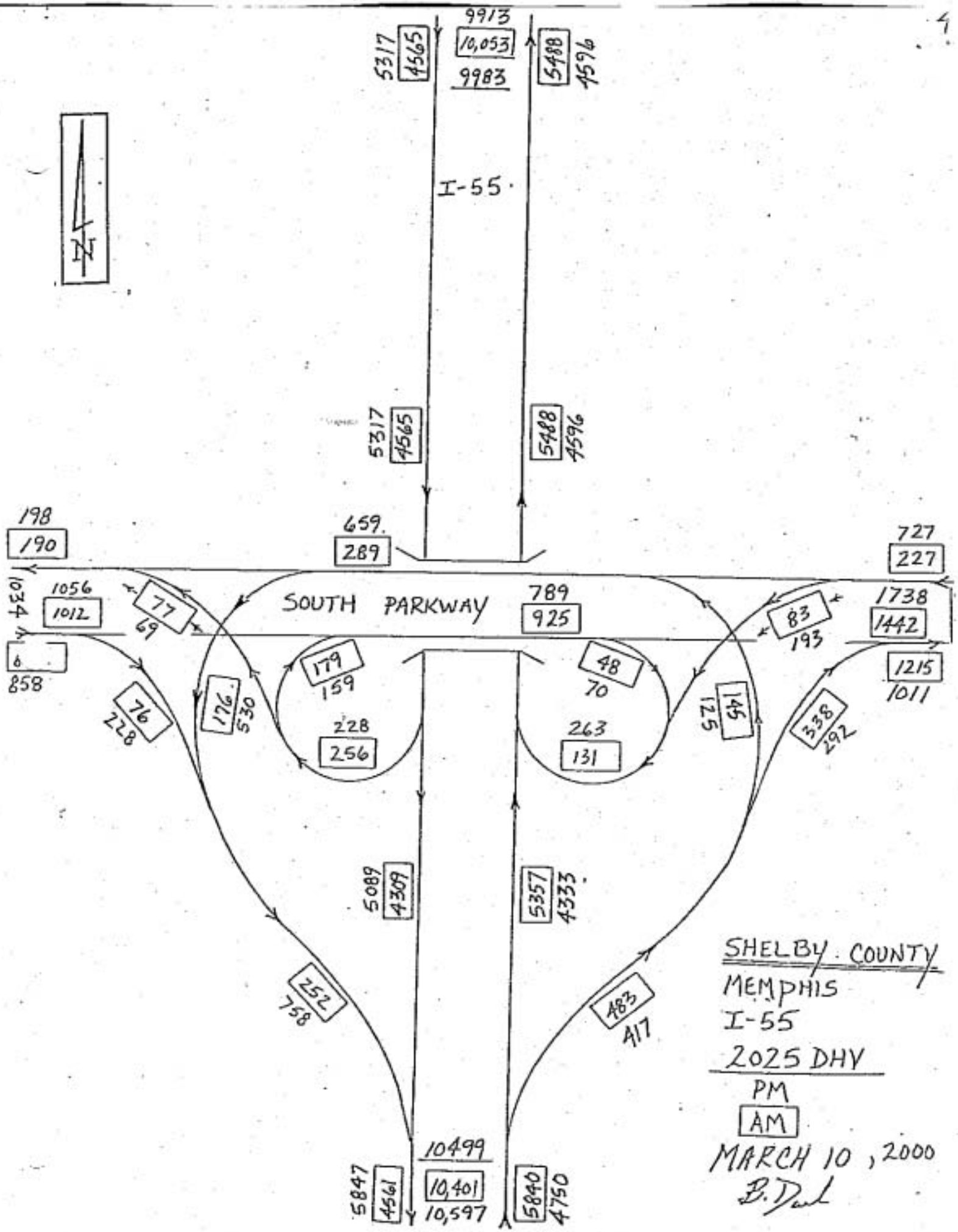

SHELBY COUNTY
MEMPHIS
I-55
2025 DHV
PM
AM
MARCH 10, 2000
B. Dal

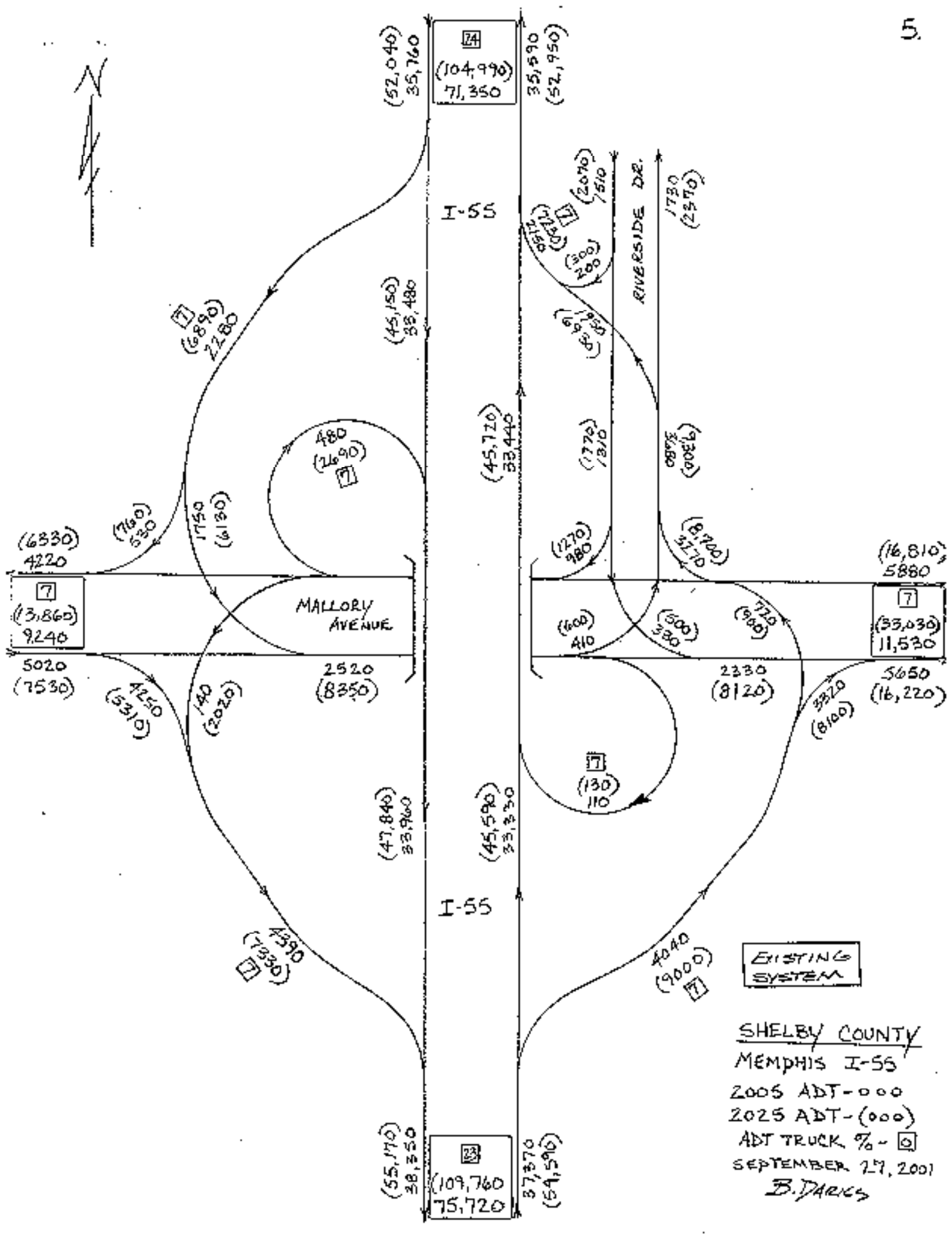

SHELBY COUNTY
MEMPHIS I-55
2005 ADT-000
2025 ADT-(000)
ADT TRUCK % - 0
SEPTEMBER 27, 2001
B. DARKS

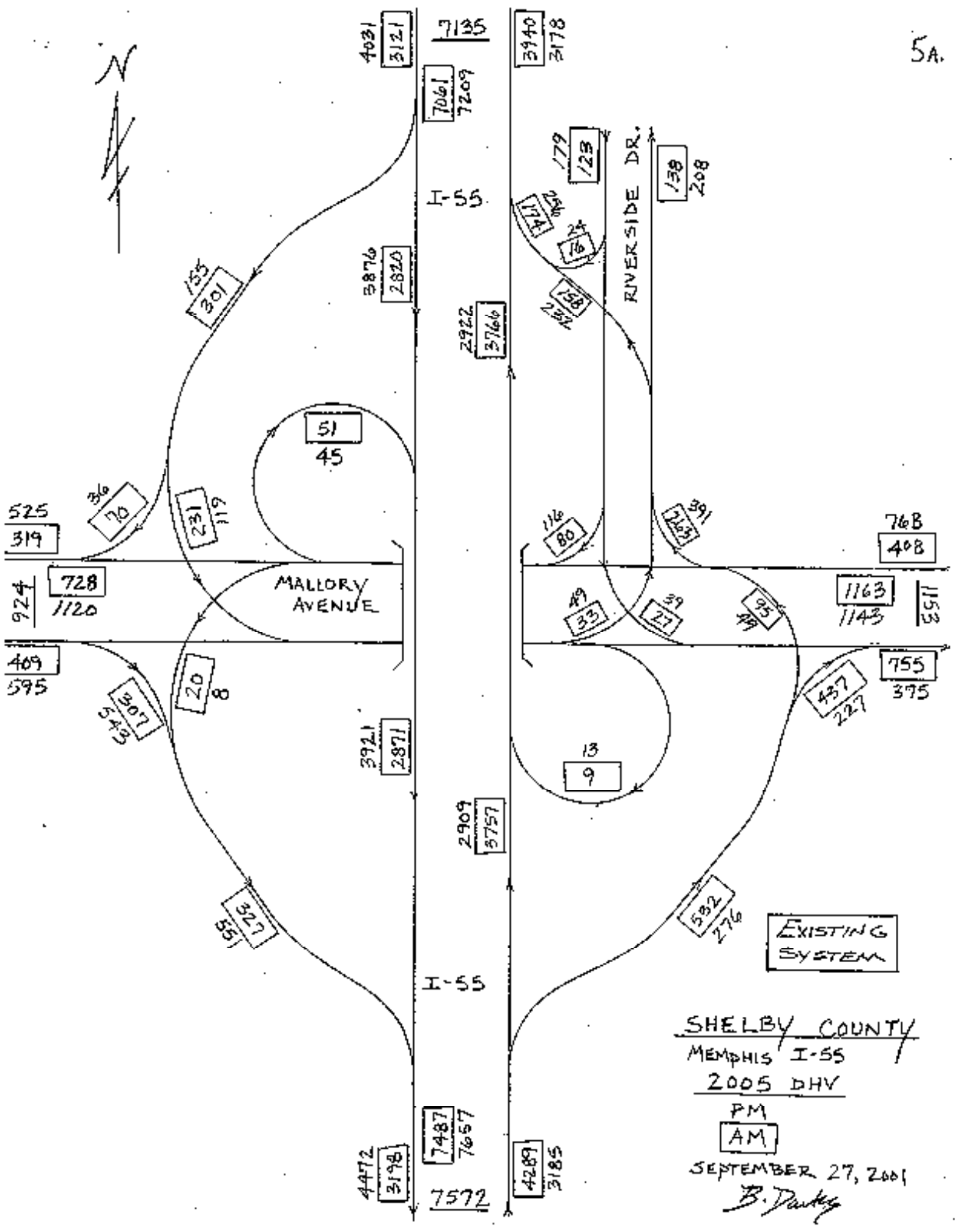

SHELBY COUNTY
MEMPHIS I-55
2005 DHV
PM
AM
SEPTEMBER 27, 2001
B. Darby

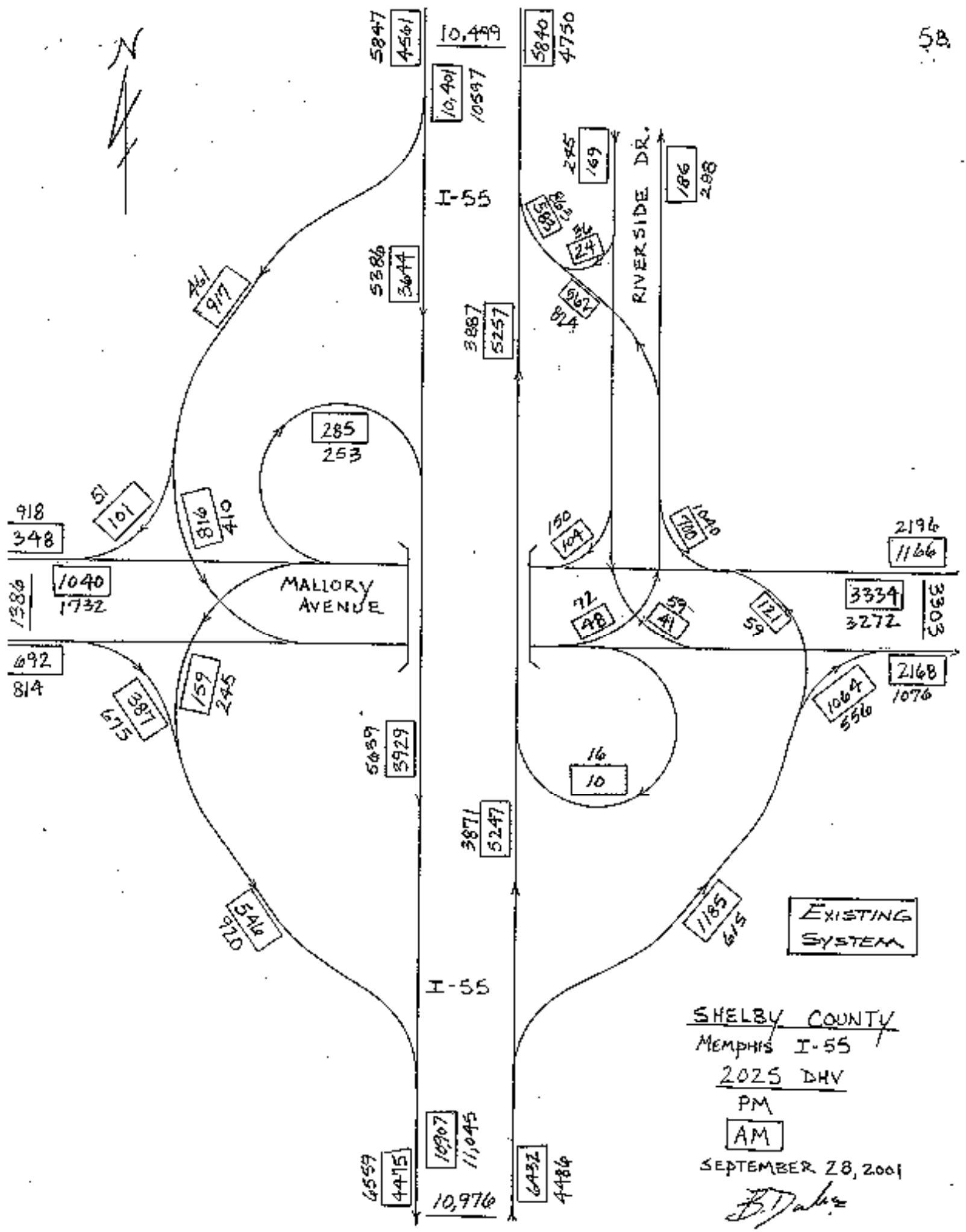

EXISTING SYSTEM

SHELBY COUNTY
MEMPHIS I-55
2025 DHV
PM
AM
SEPTEMBER 28, 2001

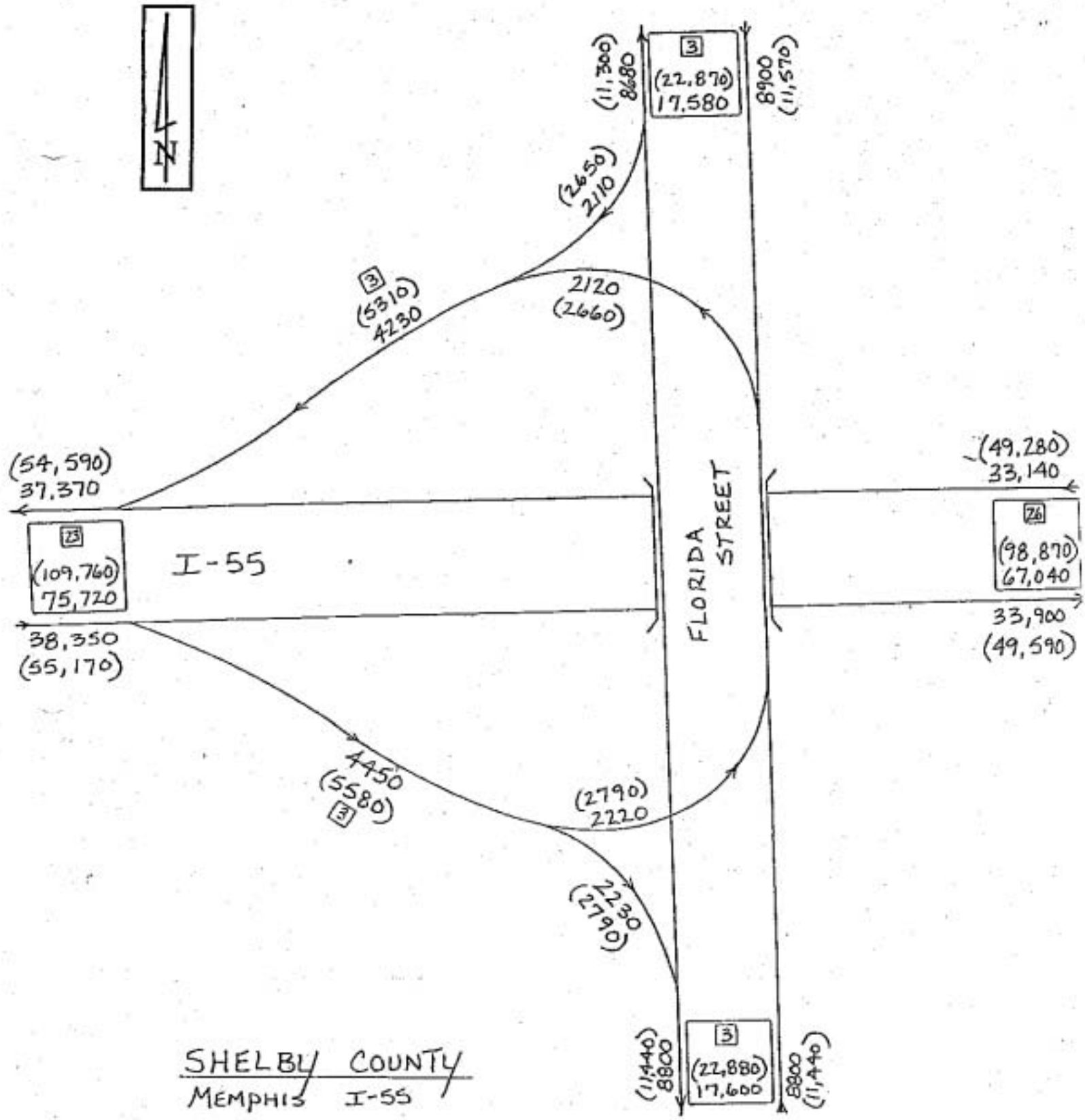

SHELBY COUNTY
MEMPHIS I-55
2005 ADT-000
2025 ADT-(000)
ADT TRUCK % - [0]
MARCH 20, 2001

B. Dailey

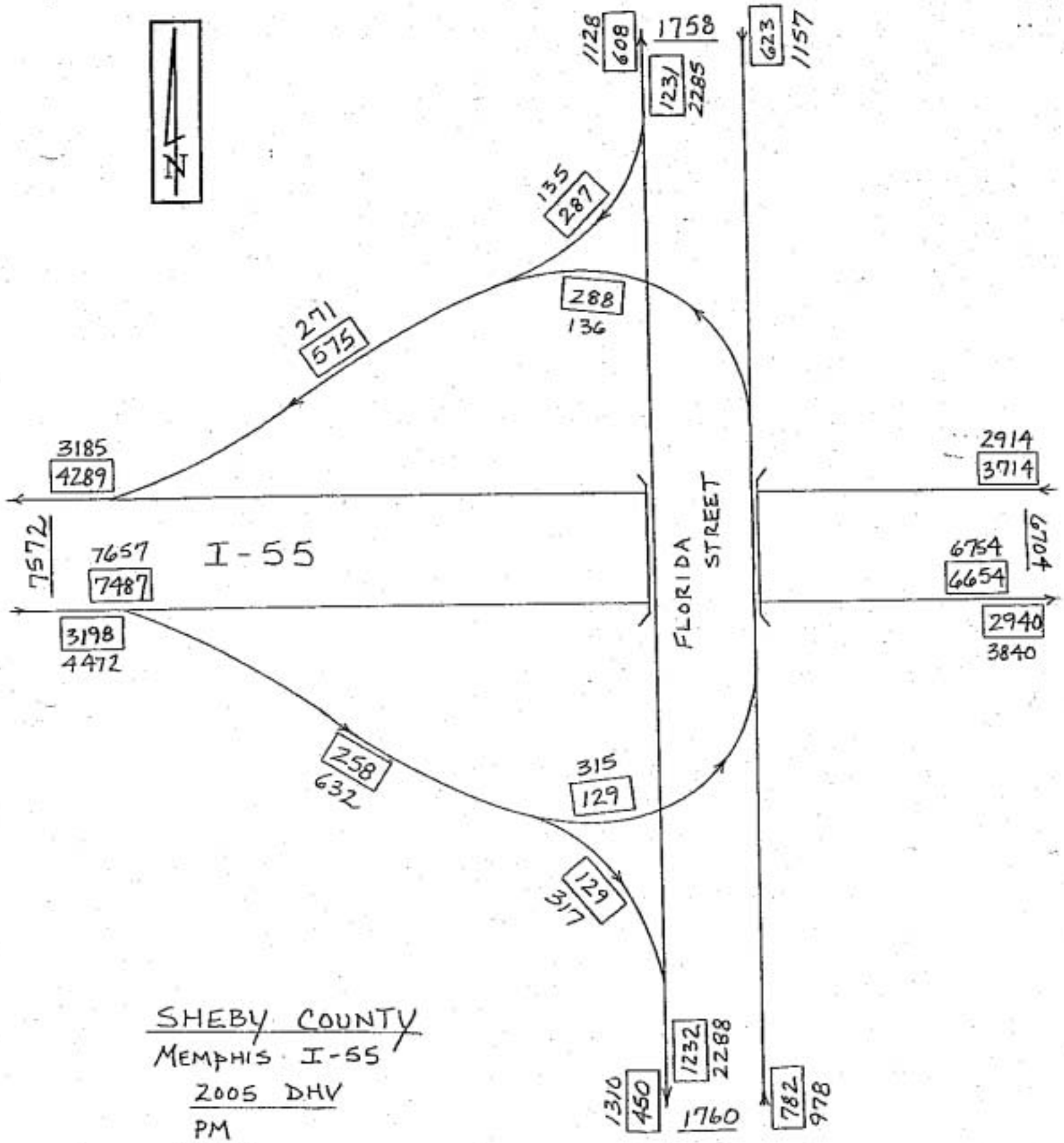

SHELBY COUNTY
MEMPHIS I-55
2005 DHV
PM
AM
MARCH 20, 2001
B. Davis

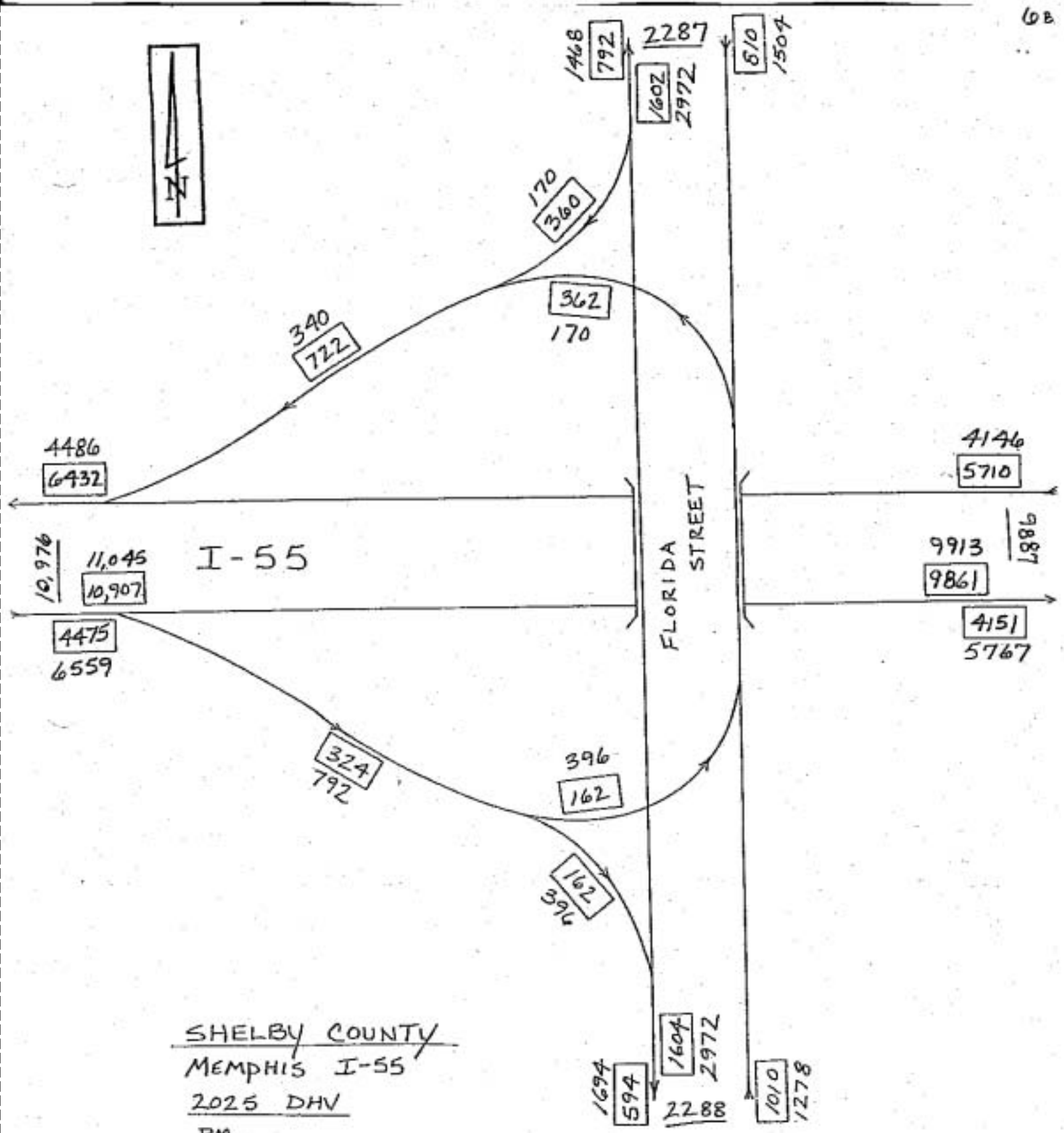

SHELBY COUNTY
MEMPHIS I-55
2025 DHV
PM
AM
MARCH 20, 2001

B. Parks

PROPOSED INTERCHANGE

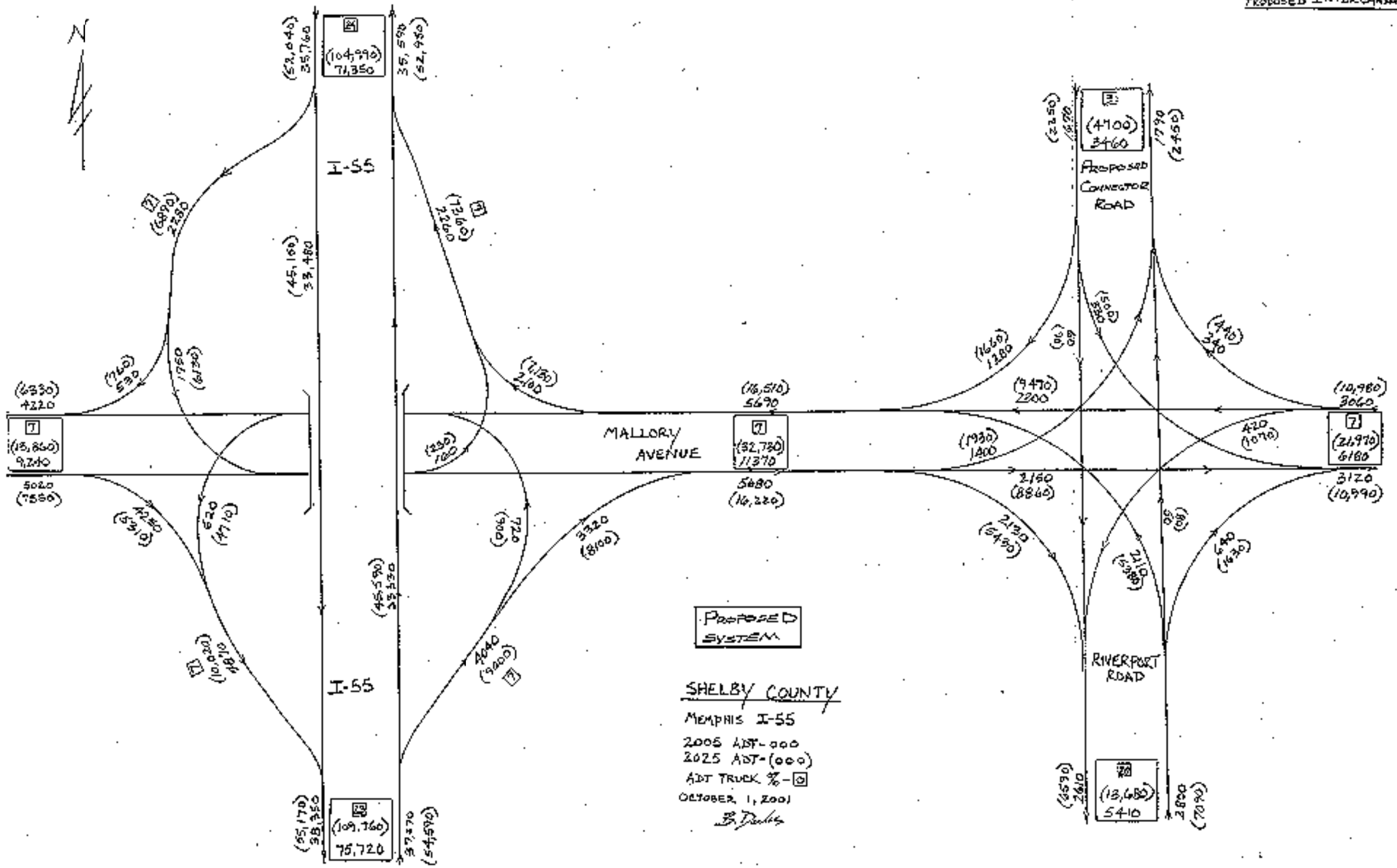

PROPOSED INTERCHANGE

2005 DHV

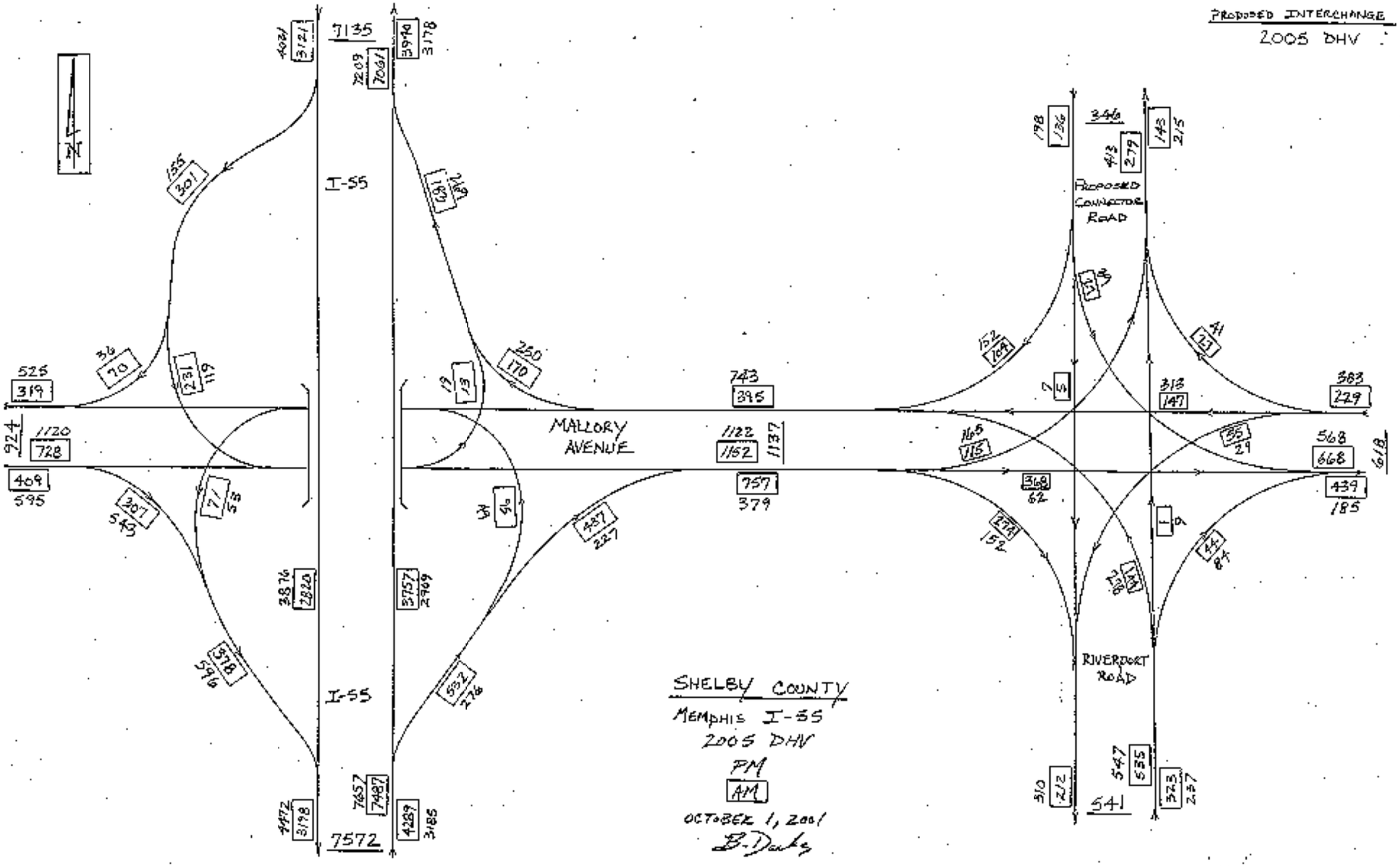

PROPOSED INTERCHANGE
2025 DHV

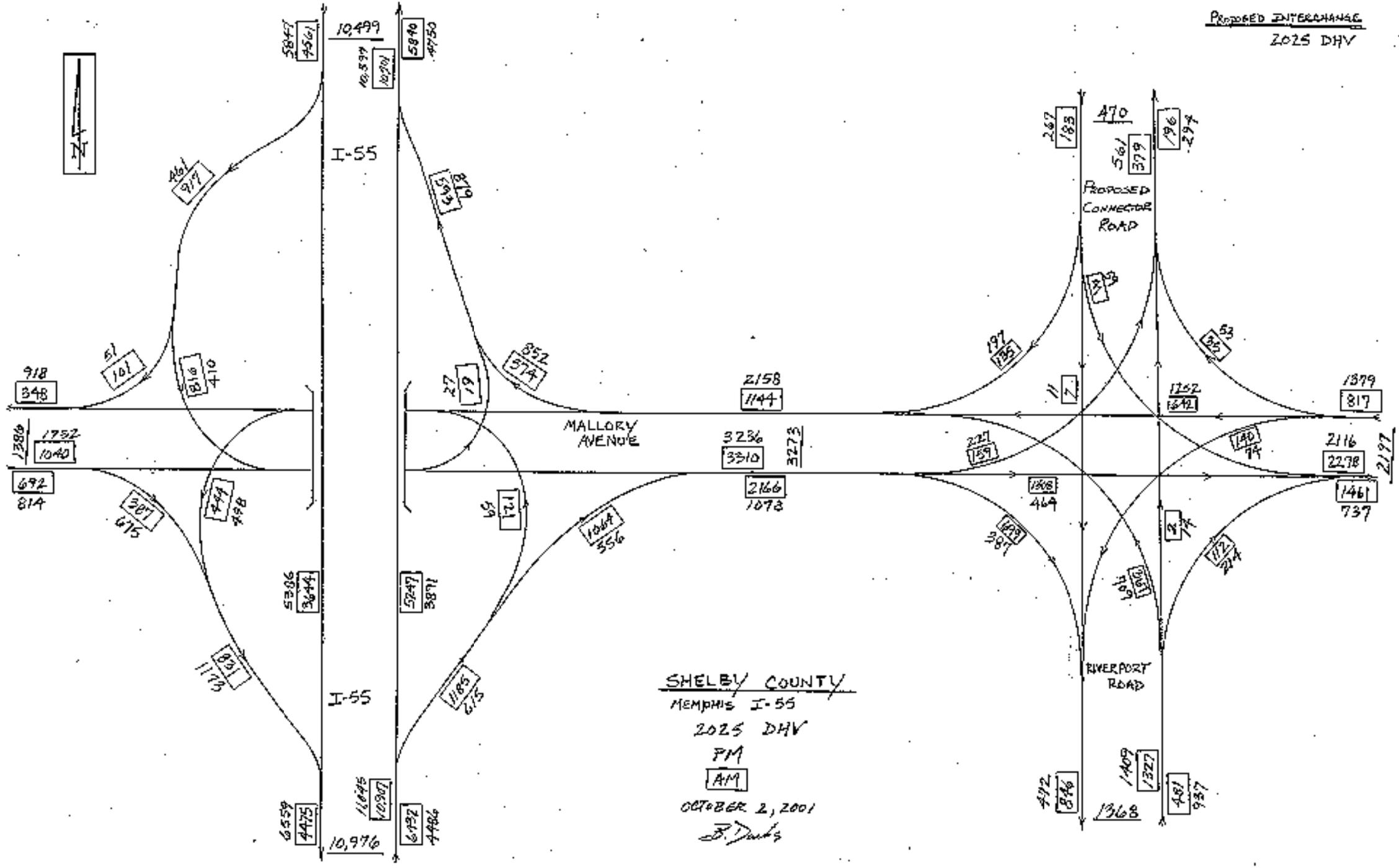

APPENDIX B

LEVEL OF SERVICE: EXISTING AND PROPOSED

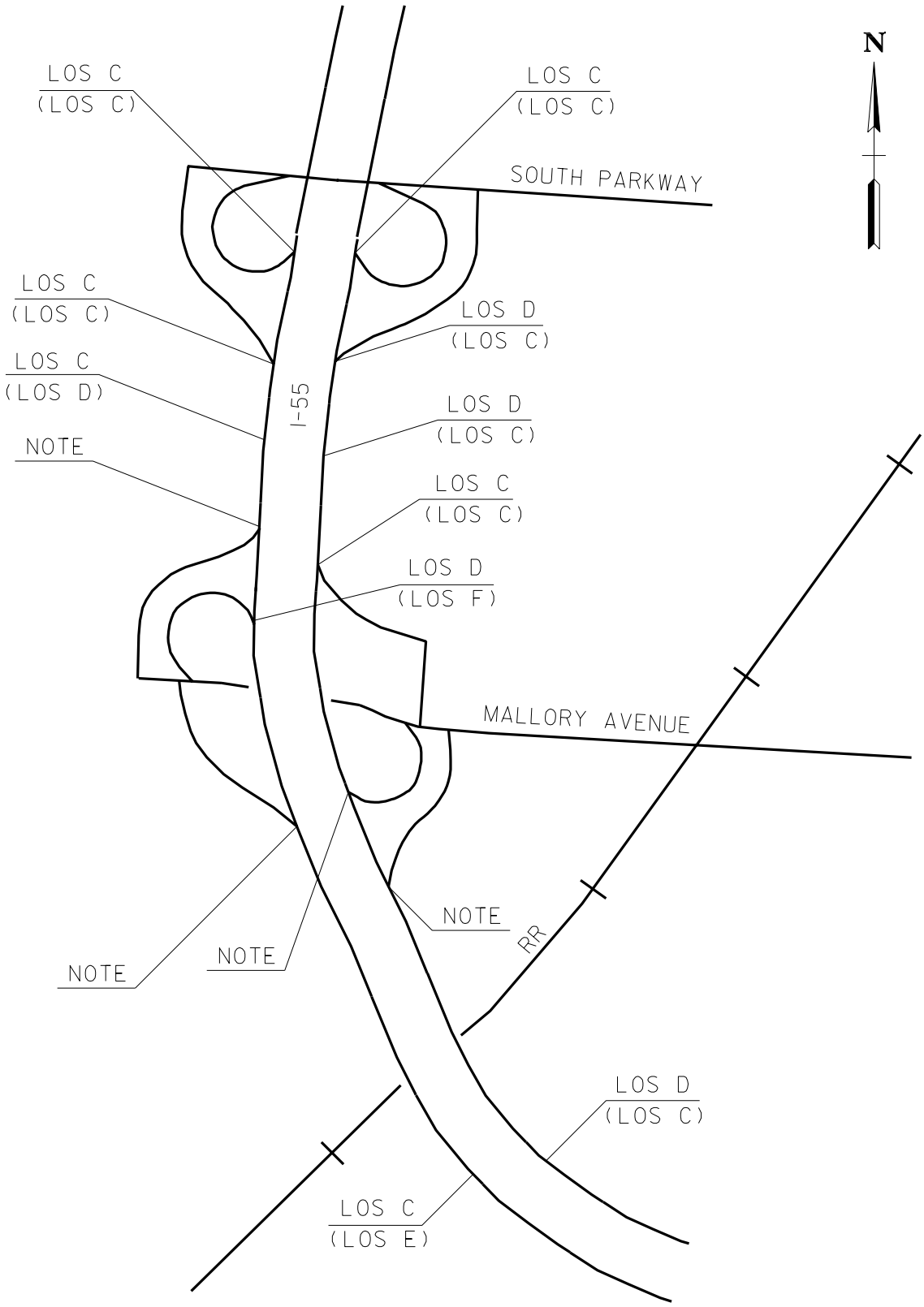

I-55 & MALLORY AVE.
INTERCHANGE MODIFICATION STUDY
MEMPHIS, SHELBY COUNTY, TENNESSEE
EXISTING 2005 CONDITIONS
AM - (PM)

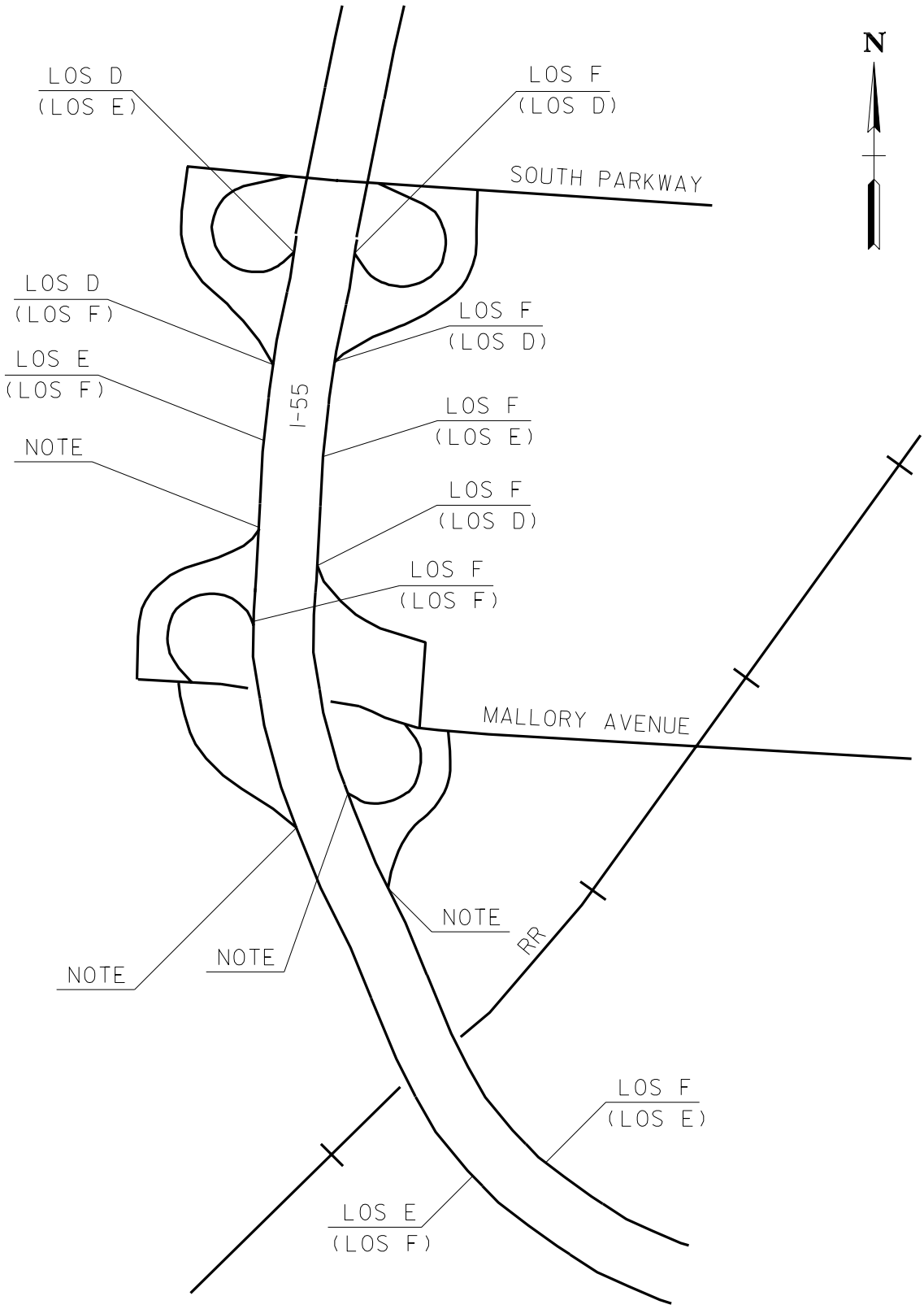

I-55 & MALLORY AVE.
INTERCHANGE MODIFICATION STUDY
MEMPHIS, SHELBY COUNTY, TENNESSEE
EXISTING 2025 CONDITIONS
AM - (PM)

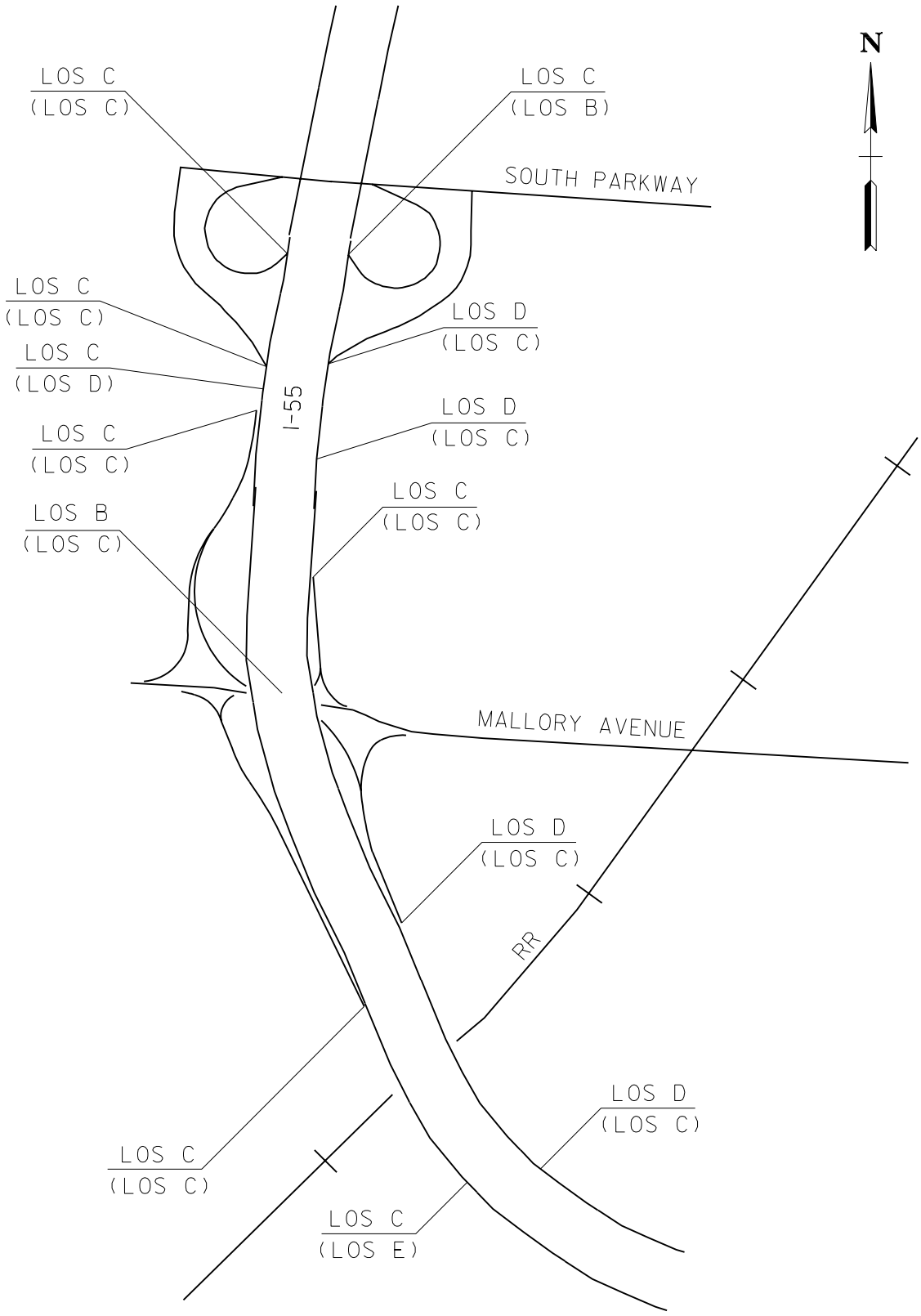

I-55 & MALLORY AVE.
INTERCHANGE MODIFICATION STUDY
MEMPHIS, SHELBY COUNTY, TENNESSEE
PROPOSED 2005 CONDITIONS
AM - (PM)

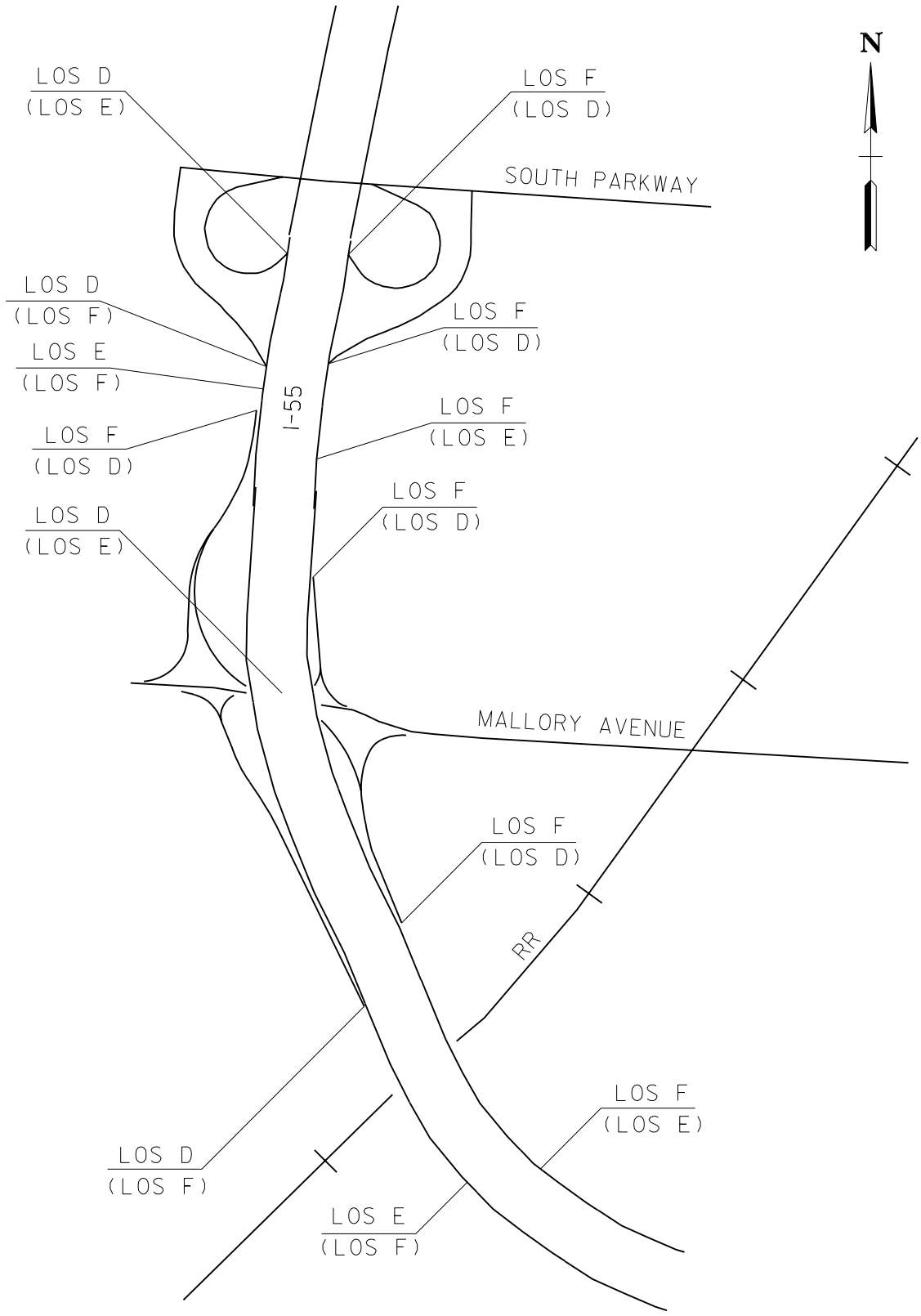

I-55 & MALLORY AVE.
INTERCHANGE MODIFICATION STUDY
MEMPHIS, SHELBY COUNTY, TENNESSEE
PROPOSED 2025 CONDITIONS
AM - (PM)

APPENDIX C

CAPACITY ANALYSIS: EXISTING CONDITIONS

FREEWAY SECTIONS

HCS: Basic Freeway Sections Release 3.1c

OPERATIONAL ANALYSIS

Highway/Dir. Travel:	NB I-55
From/To:	North of S. Parkway
Agency or Company:	Fischbach
Analyst:	Fischbach
Analysis Time Period:	AM Peak Hour
Jurisdiction:	Memphis, Shelby County, TN
Analysis Year:	2005 DHVs
Date Performed:	June 2001

VOLUME

Volume, V	3717	vph
Peak-Hour Factor, PHF	0.90	
Peak 15-min Volume, v15	1033	v
Number of Lanes, N	3	
Terrain Type	Level	
Grade	0.00	%
Segment Length	0.00	mi
Trucks and Buses	25	%
Trucks and Buses PCE, ET	1.5	
Recreational Vehicles	0	%
Recreational Vehicle PCE, ER	1.2	
Heavy Vehicle Adjustment, fHV	0.89	
Driver Population Adjustment, fP	1.00	
Adjusted Flow Rate, vp	1549	pcphpl

FREE-FLOW SPEED

Free-Flow Speed:	Ideal	
FFS or FFSi	55.0	mph
Lane Width	12.0	ft
Lane Width Adjustment, fLW	0.0	mph
Right-Shoulder Lateral Clearance	6.0	ft
Lateral Clearance Adjustment, fLC	0.0	mph
Interchange Density	1.50	interchange/mi
Interchange Density Adjustment, fID	5.0	mph
Number of Lanes, N	3	
Number of Lanes Adjustment, fN	3.0	mph
Adjusted Free-Flow Speed	55.0	mph
	Regular Freeway	

Adjusted free-flow speed cannot be less than 55 mph.

RESULTS

Adjusted Flow Rate, vp	1549	pcphpl
Adjusted Free-Flow Speed, FFS	55.0	mph
Average Passenger-Car Speed, S	55.0	mph
Number of Lanes, N	3	
Density, D	28.2	pc/mi/ln
Level of Service, LOS	D	

HCS: Basic Freeway Sections Release 3.1c

OPERATIONAL ANALYSIS

Highway/Dir. Travel:	NB I-55
From/To:	North of S. Parkway
Agency or Company:	Fischbach
Analyst:	GLF
Analysis Time Period:	PM Peak Hour
Jurisdiction:	Memphis, Shelby County, TN
Analysis Year:	2005 DHVs
Date Performed:	June 2001

VOLUME

Volume, V	3053	vph
Peak-Hour Factor, PHF	0.90	
Peak 15-min Volume, v15	848	v
Number of Lanes, N	3	
Terrain Type	Level	
Grade	0.00	%
Segment Length	0.00	mi
Trucks and Buses	25	%
Trucks and Buses PCE, ET	1.5	
Recreational Vehicles	0	%
Recreational Vehicle PCE, ER	1.2	
Heavy Vehicle Adjustment, fHV	0.89	
Driver Population Adjustment, fP	1.00	
Adjusted Flow Rate, vp	1272	pcphpl

FREE-FLOW SPEED

Free-Flow Speed:	Ideal	
FFS or FFSi	55.0	mph
Lane Width	12.0	ft
Lane Width Adjustment, fLW	0.0	mph
Right-Shoulder Lateral Clearance	6.0	ft
Lateral Clearance Adjustment, fLC	0.0	mph
Interchange Density	1.50	interchange/mi
Interchange Density Adjustment, fID	5.0	mph
Number of Lanes, N	3	
Number of Lanes Adjustment, fN	3.0	mph
Adjusted Free-Flow Speed	55.0	mph
	Regular Freeway	

Adjusted free-flow speed cannot be less than 55 mph.

RESULTS

Adjusted Flow Rate, vp	1272	pcphpl
Adjusted Free-Flow Speed, FFS	55.0	mph
Average Passenger-Car Speed, S	55.0	mph
Number of Lanes, N	3	
Density, D	23.1	pc/mi/ln
Level of Service, LOS	C	

HCS: Basic Freeway Sections Release 3.1c

OPERATIONAL ANALYSIS

Highway/Dir. Travel:	SB I-55
From/To:	North of S. Parkway
Agency or Company:	Fischbach
Analyst:	GLF
Analysis Time Period:	AM Peak Hour
Jurisdiction:	Memphis, Shelby County, TN
Analysis Year:	2005 DHVs
Date Performed:	June 2001

VOLUME

Volume, V	3124	vph
Peak-Hour Factor, PHF	0.90	
Peak 15-min Volume, v15	868	v
Number of Lanes, N	3	
Terrain Type	Level	
Grade	0.00	%
Segment Length	0.00	mi
Trucks and Buses	25	%
Trucks and Buses PCE, ET	1.5	
Recreational Vehicles	0	%
Recreational Vehicle PCE, ER	1.2	
Heavy Vehicle Adjustment, fHV	0.89	
Driver Population Adjustment, fP	1.00	
Adjusted Flow Rate, vp	1302	pcphpl

FREE-FLOW SPEED

Free-Flow Speed:	Ideal	
FFS or FFSi	55.0	mph
Lane Width	12.0	ft
Lane Width Adjustment, fLW	0.0	mph
Right-Shoulder Lateral Clearance	6.0	ft
Lateral Clearance Adjustment, fLC	0.0	mph
Interchange Density	1.50	interchange/mi
Interchange Density Adjustment, fID	5.0	mph
Number of Lanes, N	3	
Number of Lanes Adjustment, fN	3.0	mph
Adjusted Free-Flow Speed	55.0	mph
	Regular Freeway	

Adjusted free-flow speed cannot be less than 55 mph.

RESULTS

Adjusted Flow Rate, vp	1302	pcphpl
Adjusted Free-Flow Speed, FFS	55.0	mph
Average Passenger-Car Speed, S	55.0	mph
Number of Lanes, N	3	
Density, D	23.7	pc/mi/ln
Level of Service, LOS	C	

HCS: Basic Freeway Sections Release 3.1c

OPERATIONAL ANALYSIS

Highway/Dir. Travel:	SB I-55
From/To:	North of S. Parkway
Agency or Company:	Fischbach
Analyst:	GLF
Analysis Time Period:	PM Peak Hour
Jurisdiction:	Memphis, Shelby County, TN
Analysis Year:	2005 DHVs
Date Performed:	June 2001

VOLUME

Volume, V	3666	vph
Peak-Hour Factor, PHF	0.90	
Peak 15-min Volume, v15	1018	v
Number of Lanes, N	3	
Terrain Type	Level	
Grade	0.00	%
Segment Length	0.00	mi
Trucks and Buses	25	%
Trucks and Buses PCE, ET	1.5	
Recreational Vehicles	0	%
Recreational Vehicle PCE, ER	1.2	
Heavy Vehicle Adjustment, fHV	0.89	
Driver Population Adjustment, fP	1.00	
Adjusted Flow Rate, vp	1528	pcphpl

FREE-FLOW SPEED

Free-Flow Speed:	Ideal	
FFS or FFSi	55.0	mph
Lane Width	12.0	ft
Lane Width Adjustment, fLW	0.0	mph
Right-Shoulder Lateral Clearance	6.0	ft
Lateral Clearance Adjustment, fLC	0.0	mph
Interchange Density	1.50	interchange/mi
Interchange Density Adjustment, fID	5.0	mph
Number of Lanes, N	3	
Number of Lanes Adjustment, fN	3.0	mph
Adjusted Free-Flow Speed	55.0	mph
	Regular Freeway	

Adjusted free-flow speed cannot be less than 55 mph.

RESULTS

Adjusted Flow Rate, vp	1528	pcphpl
Adjusted Free-Flow Speed, FFS	55.0	mph
Average Passenger-Car Speed, S	55.0	mph
Number of Lanes, N	3	
Density, D	27.8	pc/mi/ln
Level of Service, LOS	D	

HCS: Basic Freeway Sections Release 3.1c

OPERATIONAL ANALYSIS

Highway/Dir. Travel:	NB I-55
From/To:	Between S. Parkway and Mallory
Agency or Company:	Fischbach
Analyst:	GLF
Analysis Time Period:	AM Peak Hour
Jurisdiction:	Memphis, Shelby County, TN
Analysis Year:	2005 DHVs
Date Performed:	June 2001

VOLUME

Volume, V	3940	vph
Peak-Hour Factor, PHF	0.90	
Peak 15-min Volume, v15	1094	v
Number of Lanes, N	3	
Terrain Type	Level	
Grade	0.00	%
Segment Length	0.00	mi
Trucks and Buses	24	%
Trucks and Buses PCE, ET	1.5	
Recreational Vehicles	0	%
Recreational Vehicle PCE, ER	1.2	
Heavy Vehicle Adjustment, fHV	0.89	
Driver Population Adjustment, fP	1.00	
Adjusted Flow Rate, vp	1634	pcphpl

FREE-FLOW SPEED

Free-Flow Speed:	Ideal	
FFS or FFSi	55.0	mph
Lane Width	12.0	ft
Lane Width Adjustment, fLW	0.0	mph
Right-Shoulder Lateral Clearance	6.0	ft
Lateral Clearance Adjustment, fLC	0.0	mph
Interchange Density	1.50	interchange/mi
Interchange Density Adjustment, fID	5.0	mph
Number of Lanes, N	3	
Number of Lanes Adjustment, fN	3.0	mph
Adjusted Free-Flow Speed	55.0	mph
	Regular Freeway	

Adjusted free-flow speed cannot be less than 55 mph.

RESULTS

Adjusted Flow Rate, vp	1634	pcphpl
Adjusted Free-Flow Speed, FFS	55.0	mph
Average Passenger-Car Speed, S	55.0	mph
Number of Lanes, N	3	
Density, D	29.7	pc/mi/ln
Level of Service, LOS	D	

HCS: Basic Freeway Sections Release 3.1c

OPERATIONAL ANALYSIS

Highway/Dir. Travel:	NB I-55
From/To:	Between S. Parkway and Mallory
Agency or Company:	Fischbach
Analyst:	GLF
Analysis Time Period:	PM Peak Hour
Jurisdiction:	Memphis, Shelby County, TN
Analysis Year:	2005 DHVs
Date Performed:	June 2001

VOLUME

Volume, V	3178	vph
Peak-Hour Factor, PHF	0.90	
Peak 15-min Volume, v15	883	v
Number of Lanes, N	3	
Terrain Type	Level	
Grade	0.00	%
Segment Length	0.00	mi
Trucks and Buses	24	%
Trucks and Buses PCE, ET	1.5	
Recreational Vehicles	0	%
Recreational Vehicle PCE, ER	1.2	
Heavy Vehicle Adjustment, fHV	0.89	
Driver Population Adjustment, fP	1.00	
Adjusted Flow Rate, vp	1318	pcphpl

FREE-FLOW SPEED

Free-Flow Speed:	Ideal	
FFS or FFSi	55.0	mph
Lane Width	12.0	ft
Lane Width Adjustment, fLW	0.0	mph
Right-Shoulder Lateral Clearance	6.0	ft
Lateral Clearance Adjustment, fLC	0.0	mph
Interchange Density	1.50	interchange/mi
Interchange Density Adjustment, fID	5.0	mph
Number of Lanes, N	3	
Number of Lanes Adjustment, fN	3.0	mph
Adjusted Free-Flow Speed	55.0	mph
	Regular Freeway	

Adjusted free-flow speed cannot be less than 55 mph.

RESULTS

Adjusted Flow Rate, vp	1318	pcphpl
Adjusted Free-Flow Speed, FFS	55.0	mph
Average Passenger-Car Speed, S	55.0	mph
Number of Lanes, N	3	
Density, D	24.0-	pc/mi/ln
Level of Service, LOS	C	

HCS: Basic Freeway Sections Release 3.1c

OPERATIONAL ANALYSIS

Highway/Dir. Travel:	SB I-55
From/To:	Between S. Parkway and Mallory
Agency or Company:	Fischbach
Analyst:	GLF
Analysis Time Period:	AM Peak Hour
Jurisdiction:	Memphis, Shelby County, TN
Analysis Year:	2005 DHVs
Date Performed:	June 2001

VOLUME

Volume, V	3121	vph
Peak-Hour Factor, PHF	0.90	
Peak 15-min Volume, v15	867	v
Number of Lanes, N	3	
Terrain Type	Level	
Grade	0.00	%
Segment Length	0.00	mi
Trucks and Buses	24	%
Trucks and Buses PCE, ET	1.5	
Recreational Vehicles	0	%
Recreational Vehicle PCE, ER	1.2	
Heavy Vehicle Adjustment, fHV	0.89	
Driver Population Adjustment, fP	1.00	
Adjusted Flow Rate, vp	1295	pcphpl

FREE-FLOW SPEED

Free-Flow Speed:	Ideal	
FFS or FFSi	55.0	mph
Lane Width	12.0	ft
Lane Width Adjustment, fLW	0.0	mph
Right-Shoulder Lateral Clearance	6.0	ft
Lateral Clearance Adjustment, fLC	0.0	mph
Interchange Density	1.50	interchange/mi
Interchange Density Adjustment, fID	5.0	mph
Number of Lanes, N	3	
Number of Lanes Adjustment, fN	3.0	mph
Adjusted Free-Flow Speed	55.0	mph
	Regular Freeway	

Adjusted free-flow speed cannot be less than 55 mph.

RESULTS

Adjusted Flow Rate, vp	1295	pcphpl
Adjusted Free-Flow Speed, FFS	55.0	mph
Average Passenger-Car Speed, S	55.0	mph
Number of Lanes, N	3	
Density, D	23.5	pc/mi/ln
Level of Service, LOS	C	

HCS: Basic Freeway Sections Release 3.1c

OPERATIONAL ANALYSIS

Highway/Dir. Travel:	SB I-55
From/To:	Between S. Parkway and Mallory
Agency or Company:	Fischbach
Analyst:	GLF
Analysis Time Period:	PM Peak Hour
Jurisdiction:	Memphis, Shelby County, TN
Analysis Year:	2005 DHVs
Date Performed:	June 2001

VOLUME

Volume, V	4031	vph
Peak-Hour Factor, PHF	0.90	
Peak 15-min Volume, v15	1120	v
Number of Lanes, N	3	
Terrain Type	Level	
Grade	0.00	%
Segment Length	0.00	mi
Trucks and Buses	24	%
Trucks and Buses PCE, ET	1.5	
Recreational Vehicles	0	%
Recreational Vehicle PCE, ER	1.2	
Heavy Vehicle Adjustment, fHV	0.89	
Driver Population Adjustment, fP	1.00	
Adjusted Flow Rate, vp	1672	pcphpl

FREE-FLOW SPEED

Free-Flow Speed:	Ideal	
FFS or FFSi	55.0	mph
Lane Width	12.0	ft
Lane Width Adjustment, fLW	0.0	mph
Right-Shoulder Lateral Clearance	6.0	ft
Lateral Clearance Adjustment, fLC	0.0	mph
Interchange Density	1.50	interchange/mi
Interchange Density Adjustment, fID	5.0	mph
Number of Lanes, N	3	
Number of Lanes Adjustment, fN	3.0	mph
Adjusted Free-Flow Speed	55.0	mph
	Regular Freeway	

Adjusted free-flow speed cannot be less than 55 mph.

RESULTS

Adjusted Flow Rate, vp	1672	pcphpl
Adjusted Free-Flow Speed, FFS	55.0	mph
Average Passenger-Car Speed, S	55.0	mph
Number of Lanes, N	3	
Density, D	30.4	pc/mi/ln
Level of Service, LOS	D	

HCS: Basic Freeway Sections Release 3.1c

OPERATIONAL ANALYSIS

Highway/Dir. Travel:	NB I-55
From/To:	Between Mallory and Florida
Agency or Company:	Fischbach
Analyst:	GLF
Analysis Time Period:	AM Peak Hour
Jurisdiction:	Memphis, Shelby County, TN
Analysis Year:	2005 DHVs
Date Performed:	June 2001

VOLUME

Volume, V	4289	vph
Peak-Hour Factor, PHF	0.90	
Peak 15-min Volume, v15	1144	v
Number of Lanes, N	3	
Terrain Type	Level	
Grade	0.00	%
Segment Length	0.00	mi
Trucks and Buses	23	%
Trucks and Buses PCE, ET	1.5	
Recreational Vehicles	0	%
Recreational Vehicle PCE, ER	1.2	
Heavy Vehicle Adjustment, fHV	0.90	
Driver Population Adjustment, fP	1.00	
Adjusted Flow Rate, vp	1701	pcphpl

FREE-FLOW SPEED

Free-Flow Speed:	Ideal	
FFS or FFSi	55.0	mph
Lane Width	12.0	ft
Lane Width Adjustment, fLW	0.0	mph
Right-Shoulder Lateral Clearance	6.0	ft
Lateral Clearance Adjustment, fLC	0.0	mph
Interchange Density	1.50	interchange/mi
Interchange Density Adjustment, fID	5.0	mph
Number of Lanes, N	3	
Number of Lanes Adjustment, fN	3.0	mph
Adjusted Free-Flow Speed	55.0	mph
	Regular Freeway	

Adjusted free-flow speed cannot be less than 55 mph.

RESULTS

Adjusted Flow Rate, vp	1701	pcphpl
Adjusted Free-Flow Speed, FFS	55.0	mph
Average Passenger-Car Speed, S	55.0	mph
Number of Lanes, N	3	
Density, D	30.9	pc/mi/ln
Level of Service, LOS	D	

HCS: Basic Freeway Sections Release 3.1c

OPERATIONAL ANALYSIS

Highway/Dir. Travel:	NB I-55
From/To:	Between Mallory and Florida
Agency or Company:	Fischbach
Analyst:	GLF
Analysis Time Period:	PM Peak Hour
Jurisdiction:	Memphis, Shelby County, TN
Analysis Year:	2005 DHVs
Date Performed:	June 2001

VOLUME

Volume, V	3185	vph
Peak-Hour Factor, PHF	0.90	
Peak 15-min Volume, v15	830	v
Number of Lanes, N	3	
Terrain Type	Level	
Grade	0.00	%
Segment Length	0.00	mi
Trucks and Buses	23	%
Trucks and Buses PCE, ET	1.5	
Recreational Vehicles	0	%
Recreational Vehicle PCE, ER	1.2	
Heavy Vehicle Adjustment, fHV	0.90	
Driver Population Adjustment, fP	1.00	
Adjusted Flow Rate, vp	1234	pcphpl

FREE-FLOW SPEED

Free-Flow Speed:	Ideal	
FFS or FFSi	55.0	mph
Lane Width	12.0	ft
Lane Width Adjustment, fLW	0.0	mph
Right-Shoulder Lateral Clearance	6.0	ft
Lateral Clearance Adjustment, fLC	0.0	mph
Interchange Density	1.50	interchange/mi
Interchange Density Adjustment, fID	5.0	mph
Number of Lanes, N	3	
Number of Lanes Adjustment, fN	3.0	mph
Adjusted Free-Flow Speed	55.0	mph
	Regular Freeway	

Adjusted free-flow speed cannot be less than 55 mph.

RESULTS

Adjusted Flow Rate, vp	1234	pcphpl
Adjusted Free-Flow Speed, FFS	55.0	mph
Average Passenger-Car Speed, S	55.0	mph
Number of Lanes, N	3	
Density, D	22.4	pc/mi/ln
Level of Service, LOS	C	

HCS: Basic Freeway Sections Release 3.1c

OPERATIONAL ANALYSIS

Highway/Dir. Travel:	SB I-55
From/To:	Between Mallory and Florida
Agency or Company:	Fischbach
Analyst:	GLF
Analysis Time Period:	AM Peak Hour
Jurisdiction:	Memphis, Shelby County, TN
Analysis Year:	2005 DHVs
Date Performed:	June 2001

VOLUME

Volume, V	3198	vph
Peak-Hour Factor, PHF	0.90	
Peak 15-min Volume, v15	872	v
Number of Lanes, N	3	
Terrain Type	Level	
Grade	0.00	%
Segment Length	0.00	mi
Trucks and Buses	23	%
Trucks and Buses PCE, ET	1.5	
Recreational Vehicles	0	%
Recreational Vehicle PCE, ER	1.2	
Heavy Vehicle Adjustment, fHV	0.90	
Driver Population Adjustment, fP	1.00	
Adjusted Flow Rate, vp	1296	pcphpl

FREE-FLOW SPEED

Free-Flow Speed:	Ideal	
FFS or FFSi	55.0	mph
Lane Width	12.0	ft
Lane Width Adjustment, fLW	0.0	mph
Right-Shoulder Lateral Clearance	6.0	ft
Lateral Clearance Adjustment, fLC	0.0	mph
Interchange Density	1.50	interchange/mi
Interchange Density Adjustment, fID	5.0	mph
Number of Lanes, N	3	
Number of Lanes Adjustment, fN	3.0	mph
Adjusted Free-Flow Speed	55.0	mph
	Regular Freeway	

Adjusted free-flow speed cannot be less than 55 mph.

RESULTS

Adjusted Flow Rate, vp	1296	pcphpl
Adjusted Free-Flow Speed, FFS	55.0	mph
Average Passenger-Car Speed, S	55.0	mph
Number of Lanes, N	3	
Density, D	23.6	pc/mi/ln
Level of Service, LOS	C	

HCS: Basic Freeway Sections Release 3.1c

OPERATIONAL ANALYSIS

Highway/Dir. Travel:	SB I-55
From/To:	Between Mallory and Florida
Agency or Company:	Fischbach
Analyst:	GLF
Analysis Time Period:	PM Peak Hour
Jurisdiction:	Memphis, Shelby County, TN
Analysis Year:	2005 DHVs
Date Performed:	June 2001

VOLUME

Volume, V	4472	vph
Peak-Hour Factor, PHF	0.90	
Peak 15-min Volume, v15	1231	v
Number of Lanes, N	3	
Terrain Type	Level	
Grade	0.00	%
Segment Length	0.00	mi
Trucks and Buses	23	%
Trucks and Buses PCE, ET	1.5	
Recreational Vehicles	0	%
Recreational Vehicle PCE, ER	1.2	
Heavy Vehicle Adjustment, fHV	0.90	
Driver Population Adjustment, fP	1.00	
Adjusted Flow Rate, vp	1830	pcphpl

FREE-FLOW SPEED

Free-Flow Speed:	Ideal	
FFS or FFSi	55.0	mph
Lane Width	12.0	ft
Lane Width Adjustment, fLW	0.0	mph
Right-Shoulder Lateral Clearance	6.0	ft
Lateral Clearance Adjustment, fLC	0.0	mph
Interchange Density	1.50	interchange/mi
Interchange Density Adjustment, fID	5.0	mph
Number of Lanes, N	3	
Number of Lanes Adjustment, fN	3.0	mph
Adjusted Free-Flow Speed	55.0	mph
	Regular Freeway	

Adjusted free-flow speed cannot be less than 55 mph.

RESULTS

Adjusted Flow Rate, vp	1830	pcphpl
Adjusted Free-Flow Speed, FFS	55.0	mph
Average Passenger-Car Speed, S	54.2	mph
Number of Lanes, N	3	
Density, D	33.8	pc/mi/ln
Level of Service, LOS	E	

HCS: Basic Freeway Sections Release 3.1c

OPERATIONAL ANALYSIS

Highway/Dir. Travel:	EB I-55
From/To:	East of Florida Street
Agency or Company:	Fischbach
Analyst:	GLF
Analysis Time Period:	AM Peak Hour
Jurisdiction:	Memphis, Shelby County, TN
Analysis Year:	2005 DHVs
Date Performed:	June 2001

VOLUME

Volume, V	2940	vph
Peak-Hour Factor, PHF	0.90	
Peak 15-min Volume, v15	800	v
Number of Lanes, N	3	
Terrain Type	Level	
Grade	0.00	%
Segment Length	0.00	mi
Trucks and Buses	23	%
Trucks and Buses PCE, ET	1.5	
Recreational Vehicles	0	%
Recreational Vehicle PCE, ER	1.2	
Heavy Vehicle Adjustment, fHV	0.90	
Driver Population Adjustment, fP	1.00	
Adjusted Flow Rate, vp	1189	pcphpl

FREE-FLOW SPEED

Free-Flow Speed:	Ideal	
FFS or FFSi	55.0	mph
Lane Width	12.0	ft
Lane Width Adjustment, fLW	0.0	mph
Right-Shoulder Lateral Clearance	6.0	ft
Lateral Clearance Adjustment, fLC	0.0	mph
Interchange Density	1.50	interchange/mi
Interchange Density Adjustment, fID	5.0	mph
Number of Lanes, N	3	
Number of Lanes Adjustment, fN	3.0	mph
Adjusted Free-Flow Speed	55.0	mph
	Regular Freeway	

Adjusted free-flow speed cannot be less than 55 mph.

RESULTS

Adjusted Flow Rate, vp	1189	pcphpl
Adjusted Free-Flow Speed, FFS	55.0	mph
Average Passenger-Car Speed, S	55.0	mph
Number of Lanes, N	3	
Density, D	21.6	pc/mi/ln
Level of Service, LOS	C	

HCS: Basic Freeway Sections Release 3.1c

OPERATIONAL ANALYSIS

Highway/Dir. Travel:	EB I-55
From/To:	East of Florida Street
Agency or Company:	Fischbach
Analyst:	GLF
Analysis Time Period:	PM Peak Hour
Jurisdiction:	Memphis, Shelby County, TN
Analysis Year:	2005 DHVs
Date Performed:	June 2001

VOLUME

Volume, V	3840	vph
Peak-Hour Factor, PHF	0.90	
Peak 15-min Volume, v15	1056	v
Number of Lanes, N	3	
Terrain Type	Level	
Grade	0.00	%
Segment Length	0.00	mi
Trucks and Buses	23	%
Trucks and Buses PCE, ET	1.5	
Recreational Vehicles	0	%
Recreational Vehicle PCE, ER	1.2	
Heavy Vehicle Adjustment, fHV	0.90	
Driver Population Adjustment, fP	1.00	
Adjusted Flow Rate, vp	1569	pcphpl

FREE-FLOW SPEED

Free-Flow Speed:	Ideal	
FFS or FFSi	55.0	mph
Lane Width	12.0	ft
Lane Width Adjustment, fLW	0.0	mph
Right-Shoulder Lateral Clearance	6.0	ft
Lateral Clearance Adjustment, fLC	0.0	mph
Interchange Density	1.50	interchange/mi
Interchange Density Adjustment, fID	5.0	mph
Number of Lanes, N	3	
Number of Lanes Adjustment, fN	3.0	mph
Adjusted Free-Flow Speed	55.0	mph
	Regular Freeway	

Adjusted free-flow speed cannot be less than 55 mph.

RESULTS

Adjusted Flow Rate, vp	1569	pcphpl
Adjusted Free-Flow Speed, FFS	55.0	mph
Average Passenger-Car Speed, S	55.0	mph
Number of Lanes, N	3	
Density, D	28.5	pc/mi/ln
Level of Service, LOS	D	

HCS: Basic Freeway Sections Release 3.1c

OPERATIONAL ANALYSIS

Highway/Dir. Travel:	WB I-55
From/To:	East of Florida Street
Agency or Company:	Fischbach
Analyst:	GLF
Analysis Time Period:	AM Peak Hour
Jurisdiction:	Memphis, Shelby County, TN
Analysis Year:	2005 DHVs
Date Performed:	June 2001

VOLUME

Volume, V	3714	vph
Peak-Hour Factor, PHF	0.90	
Peak 15-min Volume, v15	984	v
Number of Lanes, N	3	
Terrain Type	Level	
Grade	0.00	%
Segment Length	0.00	mi
Trucks and Buses	23	%
Trucks and Buses PCE, ET	1.5	
Recreational Vehicles	0	%
Recreational Vehicle PCE, ER	1.2	
Heavy Vehicle Adjustment, fHV	0.90	
Driver Population Adjustment, fP	1.00	
Adjusted Flow Rate, vp	1464	pcphpl

FREE-FLOW SPEED

Free-Flow Speed:	Ideal	
FFS or FFSi	55.0	mph
Lane Width	12.0	ft
Lane Width Adjustment, fLW	0.0	mph
Right-Shoulder Lateral Clearance	6.0	ft
Lateral Clearance Adjustment, fLC	0.0	mph
Interchange Density	1.50	interchange/mi
Interchange Density Adjustment, fID	5.0	mph
Number of Lanes, N	3	
Number of Lanes Adjustment, fN	3.0	mph
Adjusted Free-Flow Speed	55.0	mph
	Regular Freeway	

Adjusted free-flow speed cannot be less than 55 mph.

RESULTS

Adjusted Flow Rate, vp	1464	pcphpl
Adjusted Free-Flow Speed, FFS	55.0	mph
Average Passenger-Car Speed, S	55.0	mph
Number of Lanes, N	3	
Density, D	26.6	pc/mi/ln
Level of Service, LOS	D	

HCS: Basic Freeway Sections Release 3.1c

OPERATIONAL ANALYSIS

Highway/Dir. Travel:	WB I-55
From/To:	East of Florida Street
Agency or Company:	Fischbach
Analyst:	GLF
Analysis Time Period:	PM Peak Hour
Jurisdiction:	Memphis, Shelby County, TN
Analysis Year:	2005 DHVs
Date Performed:	June 2001

VOLUME

Volume, V	2914	vph
Peak-Hour Factor, PHF	0.90	
Peak 15-min Volume, v15	755	v
Number of Lanes, N	3	
Terrain Type	Level	
Grade	0.00	%
Segment Length	0.00	mi
Trucks and Buses	23	%
Trucks and Buses PCE, ET	1.5	
Recreational Vehicles	0	%
Recreational Vehicle PCE, ER	1.2	
Heavy Vehicle Adjustment, fHV	0.90	
Driver Population Adjustment, fP	1.00	
Adjusted Flow Rate, vp	1122	pcphpl

FREE-FLOW SPEED

Free-Flow Speed:	Ideal	
FFS or FFSi	55.0	mph
Lane Width	12.0	ft
Lane Width Adjustment, fLW	0.0	mph
Right-Shoulder Lateral Clearance	6.0	ft
Lateral Clearance Adjustment, fLC	0.0	mph
Interchange Density	1.50	interchange/mi
Interchange Density Adjustment, fID	5.0	mph
Number of Lanes, N	3	
Number of Lanes Adjustment, fN	3.0	mph
Adjusted Free-Flow Speed	55.0	mph
	Regular Freeway	

Adjusted free-flow speed cannot be less than 55 mph.

RESULTS

Adjusted Flow Rate, vp	1122	pcphpl
Adjusted Free-Flow Speed, FFS	55.0	mph
Average Passenger-Car Speed, S	55.0	mph
Number of Lanes, N	3	
Density, D	20.4	pc/mi/ln
Level of Service, LOS	C	

RAMP JUNCTIONS

HCS2000: Ramps and Ramp Junctions Release 4.1

Diverge Analysis

Analyst:	Fischbach
Date performed:	June 2001
Analysis time period:	AM Peak Hour
Freeway/dir or travel:	NB I-55
Junction:	Off-ramp to S. Parkway
Jurisdiction:	Memphis, TN
Analysis Year:	2005 DHVs

Freeway Data

Type of analysis	Diverge	
Number of lanes in freeway	3	
Free-flow speed on freeway	55.0	mph
Volume on freeway	3940	vph

Off Ramp Data

Side of freeway	Right	
Number of lanes in ramp	1	
Free-Flow speed on ramp	35.0	mph
Volume on ramp	333	vph
Length of first accel/decel lane	325	ft
Length of second accel/decel lane		ft

Adjacent Ramp Data (if one exists)

Does adjacent ramp exist?	Yes	
Volume on adjacent ramp	110	vph
Position of adjacent ramp	Downstream	
Type of adjacent ramp	On	
Distance to adjacent ramp	500	ft

Conversion to pc/h Under Base Conditions

Junction Components	Freeway		Ramp		Adjacent Ramp		
Volume, V (vph)	3940		333		110		vph
Peak-hour factor, PHF	0.90		0.90		0.90		
Peak 15-min volume, v15	1094		93		31		v
Trucks and buses	24		7		7		%
Recreational vehicles	0		0		0		%
Terrain type:	Level		Level		Level		
Grade	0.00	%	0.00	%	0.00	%	
Length	0.00	mi	0.00	mi	0.00	mi	
Trucks and buses PCE, ET	1.5		1.5		1.5		
Recreational vehicle PCE, ER	1.2		1.2		1.2		
Heavy vehicle adjustment, fHV	0.893		0.966		0.966		
Driver population factor, fP	1.00		1.00		1.00		
Flow rate, vp	4903		383		126		pcph

Estimation of V12 Diverge Areas

L_{EQ} = 0.00 (Equation 25-8 or 25-9)

P_{FD} = 0.620 Using Equation 5

$v_{12} = v_R + (v_F - v_R) P_{FD}$ = 3185 pc/h

Capacity Checks

	Actual	Maximum	LOS F?
$v_{Fi} = v_F$	4903	6750	No
v_{12}	3185	4400	No
$v_{FO} = v_F - v_R$	4520	6750	No
v_R	383	2000	No

Level of Service Determination (if not F)

Density, $D = 4.252 + 0.0086 v_R - 0.009 L_D$ = 28.7 pc/mi/ln

Level of service for ramp-freeway junction areas of influence D

Speed Estimation

Intermediate speed variable, D_S = 0.462

Space mean speed in ramp influence area, S_R = 49 mph

Space mean speed in outer lanes, S_0 = 57.5 mph

Space mean speed for all vehicles, S = 51.7 mph

HCS2000: Ramps and Ramp Junctions Release 4.1

Diverge Analysis

Analyst:	Fischbach
Agency/Co.:	Fischbach
Date performed:	June 2001
Analysis time period:	PM Peak Hour
Freeway/dir or travel:	NB I-55
Junction:	Off-ramp to S. Parkway
Jurisdiction:	Memphis, TN
Analysis Year:	2005 DHVs
Description:	10019

Freeway Data

Type of analysis	Diverge	
Number of lanes in freeway	3	
Free-flow speed on freeway	55.0	mph
Volume on freeway	3178	vph

Off Ramp Data

Side of freeway	Right	
Number of lanes in ramp	1	
Free-Flow speed on ramp	35.0	mph
Volume on ramp	287	vph
Length of first accel/decel lane	325	ft
Length of second accel/decel lane		ft

Adjacent Ramp Data (if one exists)

Does adjacent ramp exist?	Yes	
Volume on adjacent ramp	162	vph
Position of adjacent ramp	Downstream	
Type of adjacent ramp	On	
Distance to adjacent ramp	500	ft

Conversion to pc/h Under Base Conditions

Junction Components	Freeway		Ramp		Adjacent Ramp		
Volume, V (vph)	3178		287		162		vph
Peak-hour factor, PHF	0.90		0.90		0.90		
Peak 15-min volume, v15	883		80		45		v
Trucks and buses	24		7		7		%
Recreational vehicles	0		0		0		%
Terrain type:	Level		Level		Level		
Grade	0.00	%	0.00	%	0.00	%	
Length	0.00	mi	0.00	mi	0.00	mi	
Trucks and buses PCE, ET	1.5		1.5		1.5*		
Recreational vehicle PCE, ER	1.2		1.2		1.2		
Heavy vehicle adjustment, fHV	0.893		0.966		0.966		
Driver population factor, fP	1.00		1.00		1.00		
Flow rate, vp	3955		330		186		pcph

Estimation of V12 Diverge Areas

L_{EQ} = 0.00 (Equation 25-8 or 25-9)

P_{FD} = 0.646 Using Equation 5

$v_{12} = v_R + (v_F - v_R) P_{FD}$ = 2672 pc/h

Capacity Checks

	Actual	Maximum	LOS F?
$v_{Fi} = v_F$	3955	6750	No
v_{12}	2672	4400	No
$v_{FO} = v_F - v_R$	3625	6750	No
v_R	330	2000	No

Level of Service Determination (if not F)

Density, $D = 4.252 + 0.0086 v_R - 0.009 L_D$ = 24.3 pc/mi/ln

Level of service for ramp-freeway junction areas of influence C

Speed Estimation

Intermediate speed variable, D_S = 0.458

Space mean speed in ramp influence area, S_R = 49 mph

Space mean speed in outer lanes, S_0 = 59.2 mph

Space mean speed for all vehicles, S = 51.9 mph

HCS2000: Ramps and Ramp Junctions Release 4.1

Merge Analysis

Analyst:	Fischbach
Agency/Co.:	Fischbach
Date performed:	June 2001
Analysis time period:	AM Peak
Freeway/dir or travel:	I-55
Junction:	On-ramp from S. Parkway
Jurisdiction:	Memphis, TN
Analysis Year:	2005 DHVs
Description:	10019

Freeway Data

Type of analysis	52.2	
Number of lanes in freeway	3	
Free-flow speed on freeway	55.0	mph
Volume on freeway	3607	vph

On Ramp Data

Side of freeway	Right	
Number of lanes in ramp	1	
Free-flow speed on ramp	35.0	mph
Volume on ramp	110	vph
Length of first accel/decel lane	450	ft
Length of second accel/decel lane		ft

Adjacent Ramp Data (if one exists)

Does adjacent ramp exist?	Yes	
Volume on adjacent Ramp	333	vph
Position of adjacent Ramp	Upstream	
Type of adjacent Ramp	Off	
Distance to adjacent Ramp	500	ft

Conversion to pc/h Under Base Conditions

Junction Components	Freeway	Ramp	Adjacent Ramp	
Volume, V (vph)	3607	110	333	vph
Peak-hour factor, PHF	0.90	0.90	0.90	
Peak 15-min volume, v15	1002	31	93	v
Trucks and buses	24	7	7	%
Recreational vehicles	0	0	0	%
Terrain type:	Level	Level	Level	
Grade	%	%	%	
Length	mi	mi	mi	
Trucks and buses PCE, ET	1.5	1.5	1.5	
Recreational vehicle PCE, ER	1.2	1.2	1.2	
Heavy vehicle adjustment, fHV	0.893	0.966	0.966	
Driver population factor, fP	1.00	1.00	1.00	
Flow rate, vp	4489	126	383	pcph

Estimation of V12 Merge Areas

L_{EQ} = (Equation 25-2 or 25-3)

P_{FM} = 0.590 Using Equation 1

$v_{12} = v_F (P_{FM})$ = 2649 pc/h

Capacity Checks

	Actual	Maximum	LOS F?
v_{FO}	4615	6750	No
v_{R12}	2775	4600	No

Level of Service Determination (if not F)

Density, $D = 5.475 + 0.00734 v_R + 0.0078 v_{12} - 0.00627 L_A$ = 24.2 pc/mi/ln

Level of service for ramp-freeway junction areas of influence C

Speed Estimation

Intermediate speed variable, M_S = 0.352

Space mean speed in ramp influence area, S_R = 50.4 mph

Space mean speed in outer lanes, S_O = 50.2 mph

Space mean speed for all vehicles, S = 50.3 mph

HCS2000: Ramps and Ramp Junctions Release 4.1

Merge Analysis

Analyst:	Fischbach
Agency/Co.:	Fischbach
Date performed:	June 2001
Analysis time period:	PM Peak
Freeway/dir or travel:	I-55
Junction:	On-ramp from S. Parkway
Jurisdiction:	Memphis, TN
Analysis Year:	2005 DHVs
Description:	10019

Freeway Data

Type of analysis	52.6	
Number of lanes in freeway	3	
Free-flow speed on freeway	55.0	mph
Volume on freeway	2981	vph

On Ramp Data

Side of freeway	Right	
Number of lanes in ramp	1	
Free-flow speed on ramp	35.0	mph
Volume on ramp	162	vph
Length of first accel/decel lane	450	ft
Length of second accel/decel lane		ft

Adjacent Ramp Data (if one exists)

Does adjacent ramp exist?	Yes	
Volume on adjacent Ramp	287	vph
Position of adjacent Ramp	Upstream	
Type of adjacent Ramp	Off	
Distance to adjacent Ramp	500	ft

Conversion to pc/h Under Base Conditions

Junction Components	Freeway	Ramp	Adjacent Ramp	
Volume, V (vph)	2981	162	287	vph
Peak-hour factor, PHF	0.90	0.90	0.90	
Peak 15-min volume, v15	828	45	80	v
Trucks and buses	24	7	7	%
Recreational vehicles	0	0	0	%
Terrain type:	Level	Level	Level	
Grade	%	%	%	
Length	mi	mi	mi	
Trucks and buses PCE, ET	1.5	1.5	1.5	
Recreational vehicle PCE, ER	1.2	1.2	1.2	
Heavy vehicle adjustment, fHV	0.893	0.966	0.966	
Driver population factor, fP	1.00	1.00	1.00	
Flow rate, vp	3710	186	330	pcph

```
_____________________________Estimation of V12 Merge Areas_____________________________

                   L  =            (Equation 25-2 or 25-3)
                    EQ
                   P  =    0.590   Using Equation  1
                    FM
                   v  = v  (P  ) =  2189   pc/h
                    12   F   FM

___________________________________Capacity Checks___________________________________

                            Actual        Maximum         LOS F?
      v                     3896          6750            No
       FO
      v                     2375          4600            No
       R12

__________________Level of Service Determination (if not F)____________________

Density, D = 5.475 + 0.00734 v  + 0.0078 v   - 0.00627 L   =   21.1
pc/mi/ln
          R                   R           12            A
Level of service for ramp-freeway junction areas of influence  C

_________________________________Speed Estimation_________________________________

Intermediate speed variable,                 M  = 0.331
                                              S
Space mean speed in ramp influence area,     S  = 50.7    mph
                                              R
Space mean speed in outer lanes,             S  = 51.3    mph
                                              0
Space mean speed for all vehicles,           S  = 50.9    mph
_____________________________________________________________________________________
```

HCS2000: Ramps and Ramp Junctions Release 4.1

Diverge Analysis

Analyst:	Fischbach
Agency/Co.:	Fischbach
Date performed:	June 2001
Analysis time period:	AM Peak Hour
Freeway/dir or travel:	SB I-55
Junction:	Off-ramp to S. Parkway
Jurisdiction:	Memphis, TN
Analysis Year:	2005 DHVs
Description:	10019

Freeway Data

Type of analysis	Diverge	
Number of lanes in freeway	3	
Free-flow speed on freeway	55.0	mph
Volume on freeway	3124	vph

Off Ramp Data

Side of freeway	Right	
Number of lanes in ramp	1	
Free-Flow speed on ramp	35.0	mph
Volume on ramp	177	vph
Length of first accel/decel lane	275	ft
Length of second accel/decel lane		ft

Adjacent Ramp Data (if one exists)

Does adjacent ramp exist?	Yes	
Volume on adjacent ramp	174	vph
Position of adjacent ramp	Downstream	
Type of adjacent ramp	On	
Distance to adjacent ramp	700	ft

Conversion to pc/h Under Base Conditions

Junction Components	Freeway		Ramp		Adjacent Ramp		
Volume, V (vph)	3124		177		174		vph
Peak-hour factor, PHF	0.90		0.90		0.90		
Peak 15-min volume, v15	868		49		48		v
Trucks and buses	24		7		7		%
Recreational vehicles	0		0		0		%
Terrain type:	Level		Level		Level		
Grade	0.00	%	0.00	%	0.00	%	
Length	0.00	mi	0.00	mi	0.00	mi	
Trucks and buses PCE, ET	1.5		1.5		1.5		
Recreational vehicle PCE, ER	1.2		1.2		1.2		
Heavy vehicle adjustment, fHV	0.893		0.966		0.966		
Driver population factor, fP	1.00		1.00		1.00		
Flow rate, vp	3888		204		200		pcph

Estimation of V12 Diverge Areas

L_{EQ} = 0.00 (Equation 25-8 or 25-9)

P_{FD} = 0.653 Using Equation 5

$v_{12} = v_R + (v_F - v_R) P_{FD}$ = 2611 pc/h

Capacity Checks

	Actual	Maximum	LOS F?
$v_{Fi} = v_F$	3888	6750	No
v_{12}	2611	4400	No
$v_{FO} = v_F - v_R$	3684	6750	No
v_R	204	2000	No

Level of Service Determination (if not F)

Density, $D_R = 4.252 + 0.0086\, v_{12} - 0.009\, L_D$ = 24.2 pc/mi/ln

Level of service for ramp-freeway junction areas of influence C

Speed Estimation

Intermediate speed variable, D_S = 0.446

Space mean speed in ramp influence area, S_R = 49 mph

Space mean speed in outer lanes, S_O = 59.3 mph

Space mean speed for all vehicles, S = 52.1 mph

HCS2000: Ramps and Ramp Junctions Release 4.1

Diverge Analysis

Analyst:	Fischbach
Agency/Co.:	Fischbach
Date performed:	June 2001
Analysis time period:	PM Peak Hour
Freeway/dir or travel:	SB I-55
Junction:	Off-ramp to S. Parkway
Jurisdiction:	Memphis, TN
Analysis Year:	2005 DHVs
Description:	10019

Freeway Data

Type of analysis	Diverge	
Number of lanes in freeway	3	
Free-flow speed on freeway	55.0	mph
Volume on freeway	3666	vph

Off Ramp Data

Side of freeway	Right	
Number of lanes in ramp	1	
Free-Flow speed on ramp	35.0	mph
Volume on ramp	157	vph
Length of first accel/decel lane	275	ft
Length of second accel/decel lane		ft

Adjacent Ramp Data (if one exists)

Does adjacent ramp exist?	Yes	
Volume on adjacent ramp	522	vph
Position of adjacent ramp	Downstream	
Type of adjacent ramp	On	
Distance to adjacent ramp	700	ft

Conversion to pc/h Under Base Conditions

Junction Components	Freeway		Ramp		Adjacent Ramp		
Volume, V (vph)	3666		157		522		vph
Peak-hour factor, PHF	0.90		0.90		0.90		
Peak 15-min volume, v15	1018		44		145		v
Trucks and buses	24		7		7		%
Recreational vehicles	0		0		0		%
Terrain type:	Level		Level		Level		
Grade	0.00	%	0.00	%	0.00	%	
Length	0.00	mi	0.00	mi	0.00	mi	
Trucks and buses PCE, ET	1.5		1.5		1.5		
Recreational vehicle PCE, ER	1.2		1.2		1.2		
Heavy vehicle adjustment, fHV	0.893		0.966		0.966		
Driver population factor, fP	1.00		1.00		1.00		
Flow rate, vp	4562		181		600		pcph

Estimation of V12 Diverge Areas

L_{EQ} = 0.00 (Equation 25-8 or 25-9)

P_{FD} = 0.638 Using Equation 5

$v_{12} = v_R + (v_F - v_R) P_{FD}$ = 2974 pc/h

Capacity Checks

	Actual	Maximum	LOS F?
$v_{Fi} = v_F$	4562	6750	No
v_{12}	2974	4400	No
$v_{FO} = v_F - v_R$	4381	6750	No
v_R	181	2000	No

Level of Service Determination (if not F)

Density, $D_R = 4.252 + 0.0086\, v_{12} - 0.009\, L_D$ = 27.4 pc/mi/ln

Level of service for ramp-freeway junction areas of influence C

Speed Estimation

Intermediate speed variable, D_S = 0.444

Space mean speed in ramp influence area, S_R = 49 mph

Space mean speed in outer lanes, S_0 = 58.0 mph

Space mean speed for all vehicles, S = 52.0 mph

HCS2000: Ramps and Ramp Junctions Release 4.1

Merge Analysis

Analyst:	Fischbach
Agency/Co.:	Fischbach
Date performed:	June 2001
Analysis time period:	AM Peak Hour
Freeway/dir or travel:	SB I-55
Junction:	On-ramp from S. Parkway
Jurisdiction:	Memphis, TN
Analysis Year:	2005 DHVs
Description:	10019

Freeway Data

Type of analysis	52.6	
Number of lanes in freeway	3	
Free-flow speed on freeway	55.0	mph
Volume on freeway	2947	vph

On Ramp Data

Side of freeway	Right	
Number of lanes in ramp	1	
Free-flow speed on ramp	35.0	mph
Volume on ramp	174	vph
Length of first accel/decel lane	500	ft
Length of second accel/decel lane		ft

Adjacent Ramp Data (if one exists)

Does adjacent ramp exist?	Yes	
Volume on adjacent Ramp	177	vph
Position of adjacent Ramp	Upstream	
Type of adjacent Ramp	Off	
Distance to adjacent Ramp	700	ft

Conversion to pc/h Under Base Conditions

Junction Components	Freeway	Ramp	Adjacent Ramp	
Volume, V (vph)	2947	174	177	vph
Peak-hour factor, PHF	0.90	0.90	0.90	
Peak 15-min volume, v15	819	48	49	v
Trucks and buses	24	7	7	%
Recreational vehicles	0	0	0	%
Terrain type:	Level	Level	Level	
Grade	%	%	%	
Length	mi	mi	mi	
Trucks and buses PCE, ET	1.5	1.5	1.5	
Recreational vehicle PCE, ER	1.2	1.2	1.2	
Heavy vehicle adjustment, fHV	0.893	0.966	0.966	
Driver population factor, fP	1.00	1.00	1.00	
Flow rate, vp	3667	200	204	pcph

```
_____________________________Estimation of V12 Merge Areas_____________________________

                  L  =            (Equation 25-2 or 25-3)
                   EQ
                  P  =    0.591   Using Equation  1
                   FM
                  v  = v  (P  ) =  2169   pc/h
                   12   F   FM

___________________________________Capacity Checks___________________________________

                           Actual        Maximum         LOS F?
     v                     3867          6750            No
      FO
     v                     2369          4600            No
      R12

__________________Level of Service Determination (if not F)____________________

Density, D = 5.475 + 0.00734 v  + 0.0078 v   - 0.00627 L   =   20.7
pc/mi/ln
          R                   R           12            A
Level of service for ramp-freeway junction areas of influence  C

_________________________________Speed Estimation_________________________________

Intermediate speed variable,                M  = 0.328
                                             S
Space mean speed in ramp influence area,    S  = 50.7    mph
                                             R
Space mean speed in outer lanes,            S  = 51.4    mph
                                             0
Space mean speed for all vehicles,          S  = 51.0    mph
_____________________________________________________________________________________
```

HCS2000: Ramps and Ramp Junctions Release 4.1

Merge Analysis

Analyst:	Fischbach
Agency/Co.:	Fischbach
Date performed:	June 2001
Analysis time period:	PM Peak Hour
Freeway/dir or travel:	SB I-55
Junction:	On-ramp from S. Parkway
Jurisdiction:	Memphis, TN
Analysis Year:	2005 DHVs
Description:	10019

Freeway Data

Type of analysis	51.9	
Number of lanes in freeway	3	
Free-flow speed on freeway	55.0	mph
Volume on freeway	3509	vph

On Ramp Data

Side of freeway	Right	
Number of lanes in ramp	1	
Free-flow speed on ramp	35.0	mph
Volume on ramp	522	vph
Length of first accel/decel lane	500	ft
Length of second accel/decel lane		ft

Adjacent Ramp Data (if one exists)

Does adjacent ramp exist?	Yes	
Volume on adjacent Ramp	157	vph
Position of adjacent Ramp	Upstream	
Type of adjacent Ramp	Off	
Distance to adjacent Ramp	700	ft

Conversion to pc/h Under Base Conditions

Junction Components	Freeway	Ramp	Adjacent Ramp	
Volume, V (vph)	3509	522	157	vph
Peak-hour factor, PHF	0.90	0.90	0.90	
Peak 15-min volume, v15	975	145	44	v
Trucks and buses	24	7	7	%
Recreational vehicles	0	0	0	%
Terrain type:	Level	Level	Level	
Grade	%	%	%	
Length	mi	mi	mi	
Trucks and buses PCE, ET	1.5	1.5	1.5	
Recreational vehicle PCE, ER	1.2	1.2	1.2	
Heavy vehicle adjustment, fHV	0.893	0.966	0.966	
Driver population factor, fP	1.00	1.00	1.00	
Flow rate, vp	4367	600	181	pcph

Estimation of V12 Merge Areas

L_{EQ} = (Equation 25-2 or 25-3)

P_{FM} = 0.591 Using Equation 1

$v_{12} = v_F (P_{FM})$ = 2583 pc/h

Capacity Checks

	Actual	Maximum	LOS F?
v_{FO}	4967	6750	No
v_{R12}	3183	4600	No

Level of Service Determination (if not F)

Density, $D = 5.475 + 0.00734 v_R + 0.0078 v_{R12} - 0.00627 L_A$ = 26.9 pc/mi/ln

Level of service for ramp-freeway junction areas of influence C

Speed Estimation

Intermediate speed variable,	M_S = 0.380	
Space mean speed in ramp influence area,	S_R = 50.1	mph
Space mean speed in outer lanes,	S_0 = 50.4	mph
Space mean speed for all vehicles,	S = 50.2	mph

HCS2000: Ramps and Ramp Junctions Release 4.1

Merge Analysis

Analyst:	Fischbach
Agency/Co.:	Fischbach
Date performed:	June 2001
Analysis time period:	AM Peak Hour
Freeway/dir or travel:	NB 55
Junction:	n. on-ramp from Mallory
Jurisdiction:	Memphis, TN
Analysis Year:	2005 DHVs
Description:	10019

Freeway Data

Type of analysis	52.0	
Number of lanes in freeway	3	
Free-flow speed on freeway	55.0	mph
Volume on freeway	3766	vph

On Ramp Data

Side of freeway	Right	
Number of lanes in ramp	1	
Free-flow speed on ramp	35.0	mph
Volume on ramp	174	vph
Length of first accel/decel lane	375	ft
Length of second accel/decel lane		ft

Adjacent Ramp Data (if one exists)

Does adjacent ramp exist?	No	
Volume on adjacent Ramp		vph
Position of adjacent Ramp		
Type of adjacent Ramp		
Distance to adjacent Ramp		ft

Conversion to pc/h Under Base Conditions

Junction Components	Freeway	Ramp	Adjacent Ramp	
Volume, V (vph)	3766	174		vph
Peak-hour factor, PHF	0.90	0.90		
Peak 15-min volume, v15	1046	48		v
Trucks and buses	24	7		%
Recreational vehicles	0	0		%
Terrain type:	Level	Level	Level	
Grade	%	%	%	
Length	mi	mi	mi	
Trucks and buses PCE, ET	1.5	1.5		
Recreational vehicle PCE, ER	1.2	1.2		
Heavy vehicle adjustment, fHV	0.893	0.966		
Driver population factor, fP	1.00	1.00		
Flow rate, vp	4687	200		pcph

Estimation of V12 Merge Areas

L_{EQ} = 0.00 (Equation 25-2 or 25-3)

P_{FM} = 0.588 Using Equation 1

$v_{12} = v_F (P_{FM})$ = 2756 pc/h

Capacity Checks

	Actual	Maximum	LOS F?
v_{FO}	4887	6750	No
v_{R12}	2956	4600	No

Level of Service Determination (if not F)

Density, $D = 5.475 + 0.00734 v_R + 0.0078 v_{12} - 0.00627 L_A$ = 26.1 pc/mi/ln

Level of service for ramp-freeway junction areas of influence C

Speed Estimation

Intermediate speed variable, M_S = 0.370

Space mean speed in ramp influence area, S_R = 50.2 mph

Space mean speed in outer lanes, S_O = 49.8 mph

Space mean speed for all vehicles, S = 50.1 mph

HCS2000: Ramps and Ramp Junctions Release 4.1

Merge Analysis

Analyst:	Fischbach
Agency/Co.:	Fischbach
Date performed:	June 2001
Analysis time period:	PM Peak Hour
Freeway/dir or travel:	NB 55
Junction:	n. on-ramp from Mallory
Jurisdiction:	Memphis, TN
Analysis Year:	2005 DHVs
Description:	10019

Freeway Data

Type of analysis	52.5	
Number of lanes in freeway	3	
Free-flow speed on freeway	55.0	mph
Volume on freeway	2922	vph

On Ramp Data

Side of freeway	Right	
Number of lanes in ramp	1	
Free-flow speed on ramp	35.0	mph
Volume on ramp	256	vph
Length of first accel/decel lane	375	ft
Length of second accel/decel lane		ft

Adjacent Ramp Data (if one exists)

Does adjacent ramp exist?	No	
Volume on adjacent Ramp		vph
Position of adjacent Ramp		
Type of adjacent Ramp		
Distance to adjacent Ramp		ft

Conversion to pc/h Under Base Conditions

Junction Components	Freeway	Ramp	Adjacent Ramp	
Volume, V (vph)	2922	256		vph
Peak-hour factor, PHF	0.90	0.90		
Peak 15-min volume, v15	812	71		v
Trucks and buses	24	7		%
Recreational vehicles	0	0		%
Terrain type:	Level	Level	Level	
Grade	%	%	%	
Length	mi	mi	mi	
Trucks and buses PCE, ET	1.5	1.5		
Recreational vehicle PCE, ER	1.2	1.2		
Heavy vehicle adjustment, fHV	0.893	0.966		
Driver population factor, fP	1.00	1.00		
Flow rate, vp	3636	294		pcph

```
_____________________________Estimation of V12 Merge Areas_____________________________

                  L  =    0.00    (Equation 25-2 or 25-3)
                   EQ
                  P  =    0.588   Using Equation  1
                   FM
                  v  = v  (P  ) =  2138   pc/h
                   12   F   FM

___________________________________Capacity Checks___________________________________

                           Actual        Maximum         LOS F?
     v                     3930          6750            No
      FO
     v                     2432          4600            No
      R12

_________________Level of Service Determination (if not F)_____________________

Density, D = 5.475 + 0.00734 v  + 0.0078 v   - 0.00627 L   =   22.0
pc/mi/ln
          R                   R           12            A
Level of service for ramp-freeway junction areas of influence  C

_____________________________________Speed Estimation_____________________________________

Intermediate speed variable,                M  = 0.339
                                             S
Space mean speed in ramp influence area,    S  = 50.6    mph
                                             R
Space mean speed in outer lanes,            S  = 51.4    mph
                                             0
Space mean speed for all vehicles,          S  = 50.9    mph
_____________________________________________________________________________________
```

HCS2000: Ramps and Ramp Junctions Release 4.1

Merge Analysis

Analyst:	Fischbach
Agency/Co.:	Fischbach
Date performed:	June 2001
Analysis time period:	AM Peak Hour
Freeway/dir or travel:	SB 55
Junction:	n. on-ramp from Mallory
Jurisdiction:	Memphis, TN
Analysis Year:	2005 DHVs
Description:	10019

Freeway Data

Type of analysis	49.4	
Number of lanes in freeway	2	
Free-flow speed on freeway	55.0	mph
Volume on freeway	2820	vph

On Ramp Data

Side of freeway	Right	
Number of lanes in ramp	1	
Free-flow speed on ramp	35.0	mph
Volume on ramp	51	vph
Length of first accel/decel lane	500	ft
Length of second accel/decel lane		ft

Adjacent Ramp Data (if one exists)

Does adjacent ramp exist?	No	
Volume on adjacent Ramp		vph
Position of adjacent Ramp		
Type of adjacent Ramp		
Distance to adjacent Ramp		ft

Conversion to pc/h Under Base Conditions

Junction Components	Freeway	Ramp	Adjacent Ramp	
Volume, V (vph)	2820	51		vph
Peak-hour factor, PHF	0.90	0.90		
Peak 15-min volume, v15	783	14		v
Trucks and buses	24	7		%
Recreational vehicles	0	0		%
Terrain type:	Level	Level	Level	
Grade	%	%	%	
Length	mi	mi	mi	
Trucks and buses PCE, ET	1.5	1.5		
Recreational vehicle PCE, ER	1.2	1.2		
Heavy vehicle adjustment, fHV	0.893	0.966		
Driver population factor, fP	1.00	1.00		
Flow rate, vp	3509	59		pcph

```
_____________________________Estimation of V12 Merge Areas_____________________________

                  L  =    0.00    (Equation 25-2 or 25-3)
                   EQ
                  P  =    1.000   Using Equation  0
                   FM
                  v  = v  (P  ) =  3509   pc/h
                   12   F   FM

___________________________________Capacity Checks___________________________________

                           Actual        Maximum         LOS F?
     v                     3568          4500            No
      FO
     v                     3568          4600            No
      R12

__________________Level of Service Determination (if not F)____________________

Density, D = 5.475 + 0.00734 v  + 0.0078 v   - 0.00627 L   =   30.1
pc/mi/ln
          R                   R           12            A
Level of service for ramp-freeway junction areas of influence  D

_____________________________________Speed Estimation_____________________________________

Intermediate speed variable,                M  = 0.424
                                             S
Space mean speed in ramp influence area,    S  = 49.5    mph
                                             R
Space mean speed in outer lanes,            S  =  N/A    mph
                                             0
Space mean speed for all vehicles,          S  = 49.5    mph
_____________________________________________________________________________________
```

HCS2000: Ramps and Ramp Junctions Release 4.1

Merge Analysis

Analyst:	Fischbach
Agency/Co.:	Fischbach
Date performed:	June 2001
Analysis time period:	PM Peak Hour
Freeway/dir or travel:	SB 55
Junction:	n. on-ramp from Mallory
Jurisdiction:	Memphis, TN
Analysis Year:	2005 DHVs
Description:	10019

Freeway Data

Type of analysis	49.4	
Number of lanes in freeway	2	
Free-flow speed on freeway	55.0	mph
Volume on freeway	3876	vph

On Ramp Data

Side of freeway	Right	
Number of lanes in ramp	1	
Free-flow speed on ramp	35.0	mph
Volume on ramp	45	vph
Length of first accel/decel lane	500	ft
Length of second accel/decel lane		ft

Adjacent Ramp Data (if one exists)

Does adjacent ramp exist?	No	
Volume on adjacent Ramp		vph
Position of adjacent Ramp		
Type of adjacent Ramp		
Distance to adjacent Ramp		ft

Conversion to pc/h Under Base Conditions

Junction Components	Freeway	Ramp	Adjacent Ramp	
Volume, V (vph)	3876	45		vph
Peak-hour factor, PHF	0.90	0.90		
Peak 15-min volume, v15	1077	13		v
Trucks and buses	24	7		%
Recreational vehicles	0	0		%
Terrain type:	Level	Level	Level	
Grade	%	%	%	
Length	mi	mi	mi	
Trucks and buses PCE, ET	1.5	1.5		
Recreational vehicle PCE, ER	1.2	1.2		
Heavy vehicle adjustment, fHV	0.893	0.966		
Driver population factor, fP	1.00	1.00		
Flow rate, vp	4823	52		pcph

```
_____________________________Estimation of V12 Merge Areas_____________________________

                  L  =    0.00    (Equation 25-2 or 25-3)
                   EQ
                  P  =    1.000   Using Equation  0
                   FM
                  v  = v  (P  ) =  4823   pc/h
                   12   F   FM

___________________________________Capacity Checks___________________________________

                           Actual        Maximum         LOS F?
     v                     4875          4500            Yes
      FO
     v                     4875          4600            Yes
      R12

__________________Level of Service Determination (if not F)____________________

Density, D = 5.475 + 0.00734 v  + 0.0078 v   - 0.00627 L   =   40.3
pc/mi/ln
          R                   R           12            A
Level of service for ramp-freeway junction areas of influence  F

_____________________________________Speed Estimation_____________________________________

Intermediate speed variable,                M  = 0.797
                                             S
Space mean speed in ramp influence area,    S  = 44.6    mph
                                             R
Space mean speed in outer lanes,            S  =  N/A    mph
                                             0
Space mean speed for all vehicles,          S  = 44.6    mph
_____________________________________________________________________________________
```

HCS2000: Ramps and Ramp Junctions Release 4.1

Diverge Analysis

Analyst:	Fischbach
Agency/Co.:	Fischbach
Date performed:	June 2001
Analysis time period:	AM Peak Hour
Freeway/dir or travel:	EB I-55
Junction:	Off-ramp to Florida
Jurisdiction:	Memphis, TN
Analysis Year:	2005 DHVs
Description:	10019

Freeway Data

Type of analysis	Diverge	
Number of lanes in freeway	3	
Free-flow speed on freeway	55.0	mph
Volume on freeway	3198	vph

Off Ramp Data

Side of freeway	Right	
Number of lanes in ramp	1	
Free-Flow speed on ramp	35.0	mph
Volume on ramp	258	vph
Length of first accel/decel lane	275	ft
Length of second accel/decel lane		ft

Adjacent Ramp Data (if one exists)

Does adjacent ramp exist?	No	
Volume on adjacent ramp		vph
Position of adjacent ramp		
Type of adjacent ramp		
Distance to adjacent ramp		ft

Conversion to pc/h Under Base Conditions

Junction Components	Freeway		Ramp		Adjacent Ramp		
Volume, V (vph)	3198		258				vph
Peak-hour factor, PHF	0.90		0.90				
Peak 15-min volume, v15	888		72				v
Trucks and buses	23		3				%
Recreational vehicles	0		0				%
Terrain type:	Level		Level		Level		
Grade	0.00	%	0.00	%		%	
Length	0.00	mi	0.00	mi		mi	
Trucks and buses PCE, ET	1.5		1.5				
Recreational vehicle PCE, ER	1.2		1.2				
Heavy vehicle adjustment, fHV	0.897		0.985				
Driver population factor, fP	1.00		1.00				
Flow rate, vp	3962		291				pcph

Estimation of V12 Diverge Areas

L_{EQ} = 0.00 (Equation 25-8 or 25-9)

P_{FD} = 0.648 Using Equation 5

$v_{12} = v_R + (v_F - v_R) P_{FD}$ = 2668 pc/h

Capacity Checks

	Actual	Maximum	LOS F?
$v_{Fi} = v_F$	3962	6750	No
v_{12}	2668	4400	No
$v_{FO} = v_F - v_R$	3671	6750	No
v_R	291	2000	No

Level of Service Determination (if not F)

Density, $D = 4.252 + 0.0086 v_R - 0.009 L_D$ = 24.7 pc/mi/ln

Level of service for ramp-freeway junction areas of influence C

Speed Estimation

Intermediate speed variable, D_S = 0.454

Space mean speed in ramp influence area, S_R = 49 mph

Space mean speed in outer lanes, S_O = 59.2 mph

Space mean speed for all vehicles, S = 52.0 mph

HCS2000: Ramps and Ramp Junctions Release 4.1

Diverge Analysis

Analyst:	Fischbach
Agency/Co.:	Fischbach
Date performed:	June 2001
Analysis time period:	PM Peak Hour
Freeway/dir or travel:	EB I-55
Junction:	Off-ramp to Florida
Jurisdiction:	Memphis, TN
Analysis Year:	2005 DHVs
Description:	10019

Freeway Data

Type of analysis	Diverge	
Number of lanes in freeway	3	
Free-flow speed on freeway	55.0	mph
Volume on freeway	4472	vph

Off Ramp Data

Side of freeway	Right	
Number of lanes in ramp	1	
Free-Flow speed on ramp	35.0	mph
Volume on ramp	632	vph
Length of first accel/decel lane	275	ft
Length of second accel/decel lane		ft

Adjacent Ramp Data (if one exists)

Does adjacent ramp exist?	No	
Volume on adjacent ramp		vph
Position of adjacent ramp		
Type of adjacent ramp		
Distance to adjacent ramp		ft

Conversion to pc/h Under Base Conditions

Junction Components	Freeway		Ramp		Adjacent Ramp		
Volume, V (vph)	4472		632				vph
Peak-hour factor, PHF	0.90		0.90				
Peak 15-min volume, v15	1242		176				v
Trucks and buses	23		3				%
Recreational vehicles	0		0				%
Terrain type:	Level		Level		Level		
Grade	0.00	%	0.00	%		%	
Length	0.00	mi	0.00	mi		mi	
Trucks and buses PCE, ET	1.5		1.5				
Recreational vehicle PCE, ER	1.2		1.2				
Heavy vehicle adjustment, fHV	0.897		0.985				
Driver population factor, fP	1.00		1.00				
Flow rate, vp	5540		713				pcph

Estimation of V12 Diverge Areas

L_{EQ} = 0.00 (Equation 25-8 or 25-9)

P_{FD} = 0.589 Using Equation 5

$v_{12} = v_R + (v_F - v_R) P_{FD}$ = 3555 pc/h

Capacity Checks

	Actual	Maximum	LOS F?
$v_{Fi} = v_F$	5540	6750	No
v_{12}	3555	4400	No
$v_{FO} = v_F - v_R$	4827	6750	No
v_R	713	2000	No

Level of Service Determination (if not F)

Density, $D = 4.252 + 0.0086 v_R - 0.009 L_D$ = 32.4 pc/mi/ln

Level of service for ramp-freeway junction areas of influence D

Speed Estimation

Intermediate speed variable, D_S = 0.492

Space mean speed in ramp influence area, S_R = 49 mph

Space mean speed in outer lanes, S_0 = 56.5 mph

Space mean speed for all vehicles, S = 51.2 mph

HCS2000: Ramps and Ramp Junctions Release 4.1

Merge Analysis

Analyst:	Fischbach
Agency/Co.:	Fischbach
Date performed:	June 2001
Analysis time period:	AM Peak Hour
Freeway/dir or travel:	WB I-55
Junction:	On-ramp from Florida
Jurisdiction:	Memphis, TN
Analysis Year:	2005 DHVs
Description:	10019

Freeway Data

Type of analysis	51.7	
Number of lanes in freeway	3	
Free-flow speed on freeway	55.0	mph
Volume on freeway	3714	vph

On Ramp Data

Side of freeway	Right	
Number of lanes in ramp	1	
Free-flow speed on ramp	35.0	mph
Volume on ramp	575	vph
Length of first accel/decel lane	350	ft
Length of second accel/decel lane		ft

Adjacent Ramp Data (if one exists)

Does adjacent ramp exist?	No	
Volume on adjacent Ramp		vph
Position of adjacent Ramp		
Type of adjacent Ramp		
Distance to adjacent Ramp		ft

Conversion to pc/h Under Base Conditions

Junction Components	Freeway	Ramp	Adjacent Ramp	
Volume, V (vph)	3714	575		vph
Peak-hour factor, PHF	0.90	0.90		
Peak 15-min volume, v15	1032	160		v
Trucks and buses	23	3		%
Recreational vehicles	0	0		%
Terrain type:	Level	Level	Level	
Grade	%	%	%	
Length	mi	mi	mi	
Trucks and buses PCE, ET	1.5	1.5		
Recreational vehicle PCE, ER	1.2	1.2		
Heavy vehicle adjustment, fHV	0.897	0.985		
Driver population factor, fP	1.00	1.00		
Flow rate, vp	4601	648		pcph

```
_____________________________Estimation of V12 Merge Areas_____________________________

                  L  =    0.00    (Equation 25-2 or 25-3)
                   EQ
                  P  =    0.587   Using Equation  1
                   FM
                  v  = v  (P  ) =  2702   pc/h
                   12   F   FM

___________________________________Capacity Checks___________________________________

                           Actual        Maximum         LOS F?
     v                     5249          6750            No
      FO
     v                     3350          4600            No
      R12

__________________Level of Service Determination (if not F)____________________

Density, D = 5.475 + 0.00734 v  + 0.0078 v   - 0.00627 L   =   29.1
pc/mi/ln
          R                   R           12            A
Level of service for ramp-freeway junction areas of influence  D

_________________________________Speed Estimation_________________________________

Intermediate speed variable,                M  = 0.408
                                             S
Space mean speed in ramp influence area,    S  = 49.7    mph
                                             R
Space mean speed in outer lanes,            S  = 50.0    mph
                                             0
Space mean speed for all vehicles,          S  = 49.8    mph
_____________________________________________________________________________________
```

HCS2000: Ramps and Ramp Junctions Release 4.1

Merge Analysis

Analyst:	Fischbach
Agency/Co.:	Fischbach
Date performed:	June 2001
Analysis time period:	PM Peak Hour
Freeway/dir or travel:	WB I-55
Junction:	On-ramp from Florida
Jurisdiction:	Memphis, TN
Analysis Year:	2005 DHVs
Description:	10019

Freeway Data

Type of analysis	52.5	
Number of lanes in freeway	3	
Free-flow speed on freeway	55.0	mph
Volume on freeway	2914	vph

On Ramp Data

Side of freeway	Right	
Number of lanes in ramp	1	
Free-flow speed on ramp	35.0	mph
Volume on ramp	271	vph
Length of first accel/decel lane	350	ft
Length of second accel/decel lane		ft

Adjacent Ramp Data (if one exists)

Does adjacent ramp exist?	No	
Volume on adjacent Ramp		vph
Position of adjacent Ramp		
Type of adjacent Ramp		
Distance to adjacent Ramp		ft

Conversion to pc/h Under Base Conditions

Junction Components	Freeway	Ramp	Adjacent Ramp	
Volume, V (vph)	2914	271		vph
Peak-hour factor, PHF	0.90	0.90		
Peak 15-min volume, v15	809	75		v
Trucks and buses	23	3		%
Recreational vehicles	0	0		%
Terrain type:	Level	Level	Level	
Grade	%	%	%	
Length	mi	mi	mi	
Trucks and buses PCE, ET	1.5	1.5		
Recreational vehicle PCE, ER	1.2	1.2		
Heavy vehicle adjustment, fHV	0.897	0.985		
Driver population factor, fP	1.00	1.00		
Flow rate, vp	3610	306		pcph

```
_____________________________Estimation of V12 Merge Areas_____________________________

                  L  =    0.00    (Equation 25-2 or 25-3)
                   EQ
                  P  =    0.587   Using Equation  1
                   FM
                  v  = v  (P  ) =  2120   pc/h
                   12   F   FM

___________________________________Capacity Checks___________________________________

                           Actual        Maximum         LOS F?
     v                     3916          6750            No
      FO
     v                     2426          4600            No
      R12

__________________Level of Service Determination (if not F)____________________

Density, D = 5.475 + 0.00734 v  + 0.0078 v   - 0.00627 L   =   22.1
pc/mi/ln
          R                   R           12            A
Level of service for ramp-freeway junction areas of influence  C

_________________________________Speed Estimation_________________________________

Intermediate speed variable,                M  = 0.341
                                             S
Space mean speed in ramp influence area,    S  = 50.6    mph
                                             R
Space mean speed in outer lanes,            S  = 51.4    mph
                                             0
Space mean speed for all vehicles,          S  = 50.9    mph
_____________________________________________________________________________________
```

FREEWAY SECTIONS

HCS: Basic Freeway Sections Release 3.1c

OPERATIONAL ANALYSIS

Highway/Dir. Travel:	NB I-55
From/To:	North of S. Parkway
Agency or Company:	Fischbach
Analyst:	GLF
Analysis Time Period:	AM Peak Hour
Jurisdiction:	Memphis, Shelby County, TN
Analysis Year:	2025 DHVs
Date Performed:	June 2001

VOLUME

Volume, V	5488	vph
Peak-Hour Factor, PHF	0.90	
Peak 15-min Volume, v15	1524	v
Number of Lanes, N	3	
Terrain Type	Level	
Grade	0.00	%
Segment Length	0.00	mi
Trucks and Buses	25	%
Trucks and Buses PCE, ET	1.5	
Recreational Vehicles	0	%
Recreational Vehicle PCE, ER	1.2	
Heavy Vehicle Adjustment, fHV	0.89	
Driver Population Adjustment, fP	1.00	
Adjusted Flow Rate, vp	2287	pcphpl

FREE-FLOW SPEED

Free-Flow Speed:	Ideal	
FFS or FFSi	55.0	mph
Lane Width	12.0	ft
Lane Width Adjustment, fLW	0.0	mph
Right-Shoulder Lateral Clearance	6.0	ft
Lateral Clearance Adjustment, fLC	0.0	mph
Interchange Density	1.50	interchange/mi
Interchange Density Adjustment, fID	5.0	mph
Number of Lanes, N	3	
Number of Lanes Adjustment, fN	3.0	mph
Adjusted Free-Flow Speed	55.0	mph
	Regular Freeway	

Adjusted free-flow speed cannot be less than 55 mph.

RESULTS

Adjusted Flow Rate, vp	2287	pcphpl
Adjusted Free-Flow Speed, FFS	55.0	mph
Average Passenger-Car Speed, S	49.3	mph
Number of Lanes, N	3	
Density, D	46.3	pc/mi/ln
Level of Service, LOS	F	

HCS: Basic Freeway Sections Release 3.1c

OPERATIONAL ANALYSIS

Highway/Dir. Travel:	NB I-55
From/To:	North of S. Parkway
Agency or Company:	Fischbach
Analyst:	GLF
Analysis Time Period:	PM Peak Hour
Jurisdiction:	Memphis, Shelby County, TN
Analysis Year:	2025 DHVs
Date Performed:	June 2001

VOLUME

Volume, V	4596	vph
Peak-Hour Factor, PHF	0.90	
Peak 15-min Volume, v15	1277	v
Number of Lanes, N	3	
Terrain Type	Level	
Grade	0.00	%
Segment Length	0.00	mi
Trucks and Buses	25	%
Trucks and Buses PCE, ET	1.5	
Recreational Vehicles	0	%
Recreational Vehicle PCE, ER	1.2	
Heavy Vehicle Adjustment, fHV	0.89	
Driver Population Adjustment, fP	1.00	
Adjusted Flow Rate, vp	1915	pcphpl

FREE-FLOW SPEED

Free-Flow Speed:	Ideal	
FFS or FFSi	55.0	mph
Lane Width	12.0	ft
Lane Width Adjustment, fLW	0.0	mph
Right-Shoulder Lateral Clearance	6.0	ft
Lateral Clearance Adjustment, fLC	0.0	mph
Interchange Density	1.50	interchange/mi
Interchange Density Adjustment, fID	5.0	mph
Number of Lanes, N	3	
Number of Lanes Adjustment, fN	3.0	mph
Adjusted Free-Flow Speed	55.0	mph
	Regular Freeway	

Adjusted free-flow speed cannot be less than 55 mph.

RESULTS

Adjusted Flow Rate, vp	1915	pcphpl
Adjusted Free-Flow Speed, FFS	55.0	mph
Average Passenger-Car Speed, S	53.7	mph
Number of Lanes, N	3	
Density, D	35.7	pc/mi/ln
Level of Service, LOS	E	

HCS: Basic Freeway Sections Release 3.1c

OPERATIONAL ANALYSIS

Highway/Dir. Travel:	SB I-55
From/To:	North of S. Parkway
Agency or Company:	Fischbach
Analyst:	GLF
Analysis Time Period:	AM Peak Hour
Jurisdiction:	Memphis, Shelby County, TN
Analysis Year:	2025 DHVs
Date Performed:	June 2001

VOLUME

Volume, V	4565	vph
Peak-Hour Factor, PHF	0.90	
Peak 15-min Volume, v15	1268	v
Number of Lanes, N	3	
Terrain Type	Level	
Grade	0.00	%
Segment Length	0.00	mi
Trucks and Buses	25	%
Trucks and Buses PCE, ET	1.5	
Recreational Vehicles	0	%
Recreational Vehicle PCE, ER	1.2	
Heavy Vehicle Adjustment, fHV	0.89	
Driver Population Adjustment, fP	1.00	
Adjusted Flow Rate, vp	1902	pcphpl

FREE-FLOW SPEED

Free-Flow Speed:	Ideal	
FFS or FFSi	55.0	mph
Lane Width	12.0	ft
Lane Width Adjustment, fLW	0.0	mph
Right-Shoulder Lateral Clearance	6.0	ft
Lateral Clearance Adjustment, fLC	0.0	mph
Interchange Density	1.50	interchange/mi
Interchange Density Adjustment, fID	5.0	mph
Number of Lanes, N	3	
Number of Lanes Adjustment, fN	3.0	mph
Adjusted Free-Flow Speed	55.0	mph
	Regular Freeway	

Adjusted free-flow speed cannot be less than 55 mph.

RESULTS

Adjusted Flow Rate, vp	1902	pcphpl
Adjusted Free-Flow Speed, FFS	55.0	mph
Average Passenger-Car Speed, S	53.8	mph
Number of Lanes, N	3	
Density, D	35.4	pc/mi/ln
Level of Service, LOS	E	

HCS: Basic Freeway Sections Release 3.1c

OPERATIONAL ANALYSIS

Highway/Dir. Travel:	SB I-55
From/To:	North of S. Parkway
Agency or Company:	Fischbach
Analyst:	GLF
Analysis Time Period:	PM Peak Hour
Jurisdiction:	Memphis, Shelby County, TN
Analysis Year:	2025 DHVs
Date Performed:	June 2001

VOLUME

Volume, V	5317	vph
Peak-Hour Factor, PHF	0.90	
Peak 15-min Volume, v15	1477	v
Number of Lanes, N	3	
Terrain Type	Level	
Grade	0.00	%
Segment Length	0.00	mi
Trucks and Buses	25	%
Trucks and Buses PCE, ET	1.5	
Recreational Vehicles	0	%
Recreational Vehicle PCE, ER	1.2	
Heavy Vehicle Adjustment, fHV	0.89	
Driver Population Adjustment, fP	1.00	
Adjusted Flow Rate, vp	2215	pcphpl

FREE-FLOW SPEED

Free-Flow Speed:	Ideal	
FFS or FFSi	55.0	mph
Lane Width	12.0	ft
Lane Width Adjustment, fLW	0.0	mph
Right-Shoulder Lateral Clearance	6.0	ft
Lateral Clearance Adjustment, fLC	0.0	mph
Interchange Density	1.50	interchange/mi
Interchange Density Adjustment, fID	5.0	mph
Number of Lanes, N	3	
Number of Lanes Adjustment, fN	3.0	mph
Adjusted Free-Flow Speed	55.0	mph
	Regular Freeway	

Adjusted free-flow speed cannot be less than 55 mph.

RESULTS

Adjusted Flow Rate, vp	2215	pcphpl
Adjusted Free-Flow Speed, FFS	55.0	mph
Average Passenger-Car Speed, S	50.6	mph
Number of Lanes, N	3	
Density, D	43.8	pc/mi/ln
Level of Service, LOS	E	

HCS: Basic Freeway Sections Release 3.1c

OPERATIONAL ANALYSIS

Highway/Dir. Travel:	NB I-55
From/To:	Between S. Parkway and Mallory
Agency or Company:	Fischbach
Analyst:	GLF
Analysis Time Period:	AM Peak Hour
Jurisdiction:	Memphis, Shelby County, TN
Analysis Year:	2025 DHVs
Date Performed:	June 2001

VOLUME

Volume, V	5840	vph
Peak-Hour Factor, PHF	0.90	
Peak 15-min Volume, v15	1622	v
Number of Lanes, N	3	
Terrain Type	Level	
Grade	0.00	%
Segment Length	0.00	mi
Trucks and Buses	24	%
Trucks and Buses PCE, ET	1.5	
Recreational Vehicles	0	%
Recreational Vehicle PCE, ER	1.2	
Heavy Vehicle Adjustment, fHV	0.89	
Driver Population Adjustment, fP	1.00	
Adjusted Flow Rate, vp	2423	pcphpl

FREE-FLOW SPEED

Free-Flow Speed:	Ideal	
FFS or FFSi	55.0	mph
Lane Width	12.0	ft
Lane Width Adjustment, fLW	0.0	mph
Right-Shoulder Lateral Clearance	6.0	ft
Lateral Clearance Adjustment, fLC	0.0	mph
Interchange Density	1.50	interchange/mi
Interchange Density Adjustment, fID	5.0	mph
Number of Lanes, N	3	
Number of Lanes Adjustment, fN	3.0	mph
Adjusted Free-Flow Speed	55.0	mph
	Regular Freeway	

Adjusted free-flow speed cannot be less than 55 mph.

RESULTS

Adjusted Flow Rate, vp	2423	pcphpl
Adjusted Free-Flow Speed, FFS	55.0	mph
Average Passenger-Car Speed, S	46.4	mph
Number of Lanes, N	3	
Density, D	52.3	pc/mi/ln
Level of Service, LOS	F	

HCS: Basic Freeway Sections Release 3.1c

OPERATIONAL ANALYSIS

Highway/Dir. Travel:	NB I-55
From/To:	Between S. Parkway and Mallory
Agency or Company:	Fischbach
Analyst:	GLF
Analysis Time Period:	PM Peak Hour
Jurisdiction:	Memphis, Shelby County, TN
Analysis Year:	2025 DHVs
Date Performed:	June 2001

VOLUME

Volume, V	4750	vph
Peak-Hour Factor, PHF	0.90	
Peak 15-min Volume, v15	1319	v
Number of Lanes, N	3	
Terrain Type	Level	
Grade	0.00	%
Segment Length	0.00	mi
Trucks and Buses	24	%
Trucks and Buses PCE, ET	1.5	
Recreational Vehicles	0	%
Recreational Vehicle PCE, ER	1.2	
Heavy Vehicle Adjustment, fHV	0.89	
Driver Population Adjustment, fP	1.00	
Adjusted Flow Rate, vp	1970	pcphpl

FREE-FLOW SPEED

Free-Flow Speed:	Ideal	
FFS or FFSi	55.0	mph
Lane Width	12.0	ft
Lane Width Adjustment, fLW	0.0	mph
Right-Shoulder Lateral Clearance	6.0	ft
Lateral Clearance Adjustment, fLC	0.0	mph
Interchange Density	1.50	interchange/mi
Interchange Density Adjustment, fID	5.0	mph
Number of Lanes, N	3	
Number of Lanes Adjustment, fN	3.0	mph
Adjusted Free-Flow Speed	55.0	mph
	Regular Freeway	

Adjusted free-flow speed cannot be less than 55 mph.

RESULTS

Adjusted Flow Rate, vp	1970	pcphpl
Adjusted Free-Flow Speed, FFS	55.0	mph
Average Passenger-Car Speed, S	53.3	mph
Number of Lanes, N	3	
Density, D	36.9	pc/mi/ln
Level of Service, LOS	E	

HCS: Basic Freeway Sections Release 3.1c

OPERATIONAL ANALYSIS

Highway/Dir. Travel:	SB I-55
From/To:	Between S. Parkway and Mallory
Agency or Company:	Fischbach
Analyst:	GLF
Analysis Time Period:	AM Peak Hour
Jurisdiction:	Memphis, Shelby County, TN
Analysis Year:	2025 DHVs
Date Performed:	June 2001

VOLUME

Volume, V	4561	vph
Peak-Hour Factor, PHF	0.90	
Peak 15-min Volume, v15	1267	v
Number of Lanes, N	3	
Terrain Type	Level	
Grade	0.00	%
Segment Length	0.00	mi
Trucks and Buses	24	%
Trucks and Buses PCE, ET	1.5	
Recreational Vehicles	0	%
Recreational Vehicle PCE, ER	1.2	
Heavy Vehicle Adjustment, fHV	0.89	
Driver Population Adjustment, fP	1.00	
Adjusted Flow Rate, vp	1892	pcphpl

FREE-FLOW SPEED

Free-Flow Speed:	Ideal	
FFS or FFSi	55.0	mph
Lane Width	12.0	ft
Lane Width Adjustment, fLW	0.0	mph
Right-Shoulder Lateral Clearance	6.0	ft
Lateral Clearance Adjustment, fLC	0.0	mph
Interchange Density	1.50	interchange/mi
Interchange Density Adjustment, fID	5.0	mph
Number of Lanes, N	3	
Number of Lanes Adjustment, fN	3.0	mph
Adjusted Free-Flow Speed	55.0	mph
	Regular Freeway	

Adjusted free-flow speed cannot be less than 55 mph.

RESULTS

Adjusted Flow Rate, vp	1892	pcphpl
Adjusted Free-Flow Speed, FFS	55.0	mph
Average Passenger-Car Speed, S	53.8	mph
Number of Lanes, N	3	
Density, D	35.1	pc/mi/ln
Level of Service, LOS	E	

HCS: Basic Freeway Sections Release 3.1c

OPERATIONAL ANALYSIS

Highway/Dir. Travel:	SB I-55
From/To:	Between S. Parkway and Mallory
Agency or Company:	Fischbach
Analyst:	GLF
Analysis Time Period:	PM Peak Hour
Jurisdiction:	Memphis, Shelby County, TN
Analysis Year:	2025 DHVs
Date Performed:	June 2001

VOLUME

Volume, V	5847	vph
Peak-Hour Factor, PHF	0.90	
Peak 15-min Volume, v15	1624	v
Number of Lanes, N	3	
Terrain Type	Level	
Grade	0.00	%
Segment Length	0.00	mi
Trucks and Buses	24	%
Trucks and Buses PCE, ET	1.5	
Recreational Vehicles	0	%
Recreational Vehicle PCE, ER	1.2	
Heavy Vehicle Adjustment, fHV	0.89	
Driver Population Adjustment, fP	1.00	
Adjusted Flow Rate, vp	2425	pcphpl

FREE-FLOW SPEED

Free-Flow Speed:	Ideal	
FFS or FFSi	55.0	mph
Lane Width	12.0	ft
Lane Width Adjustment, fLW	0.0	mph
Right-Shoulder Lateral Clearance	6.0	ft
Lateral Clearance Adjustment, fLC	0.0	mph
Interchange Density	1.50	interchange/mi
Interchange Density Adjustment, fID	5.0	mph
Number of Lanes, N	3	
Number of Lanes Adjustment, fN	3.0	mph
Adjusted Free-Flow Speed	55.0	mph
	Regular Freeway	

Adjusted free-flow speed cannot be less than 55 mph.

RESULTS

Adjusted Flow Rate, vp	2425	pcphpl
Adjusted Free-Flow Speed, FFS	55.0	mph
Average Passenger-Car Speed, S	46.3	mph
Number of Lanes, N	3	
Density, D	52.4	pc/mi/ln
Level of Service, LOS	F	

HCS: Basic Freeway Sections Release 3.1c

OPERATIONAL ANALYSIS

Highway/Dir. Travel:	NB I-55
From/To:	Between Mallory and Florida
Agency or Company:	Fischbach
Analyst:	GLF
Analysis Time Period:	AM Peak Hour
Jurisdiction:	Memphis, Shelby County, TN
Analysis Year:	2025 DHVs
Date Performed:	June 2001

VOLUME

Volume, V	6432	vph
Peak-Hour Factor, PHF	0.90	
Peak 15-min Volume, v15	1669	v
Number of Lanes, N	3	
Terrain Type	Level	
Grade	0.00	%
Segment Length	0.00	mi
Trucks and Buses	23	%
Trucks and Buses PCE, ET	1.5	
Recreational Vehicles	0	%
Recreational Vehicle PCE, ER	1.2	
Heavy Vehicle Adjustment, fHV	0.90	
Driver Population Adjustment, fP	1.00	
Adjusted Flow Rate, vp	2481	pcphpl

FREE-FLOW SPEED

Free-Flow Speed:	Ideal	
FFS or FFSi	55.0	mph
Lane Width	12.0	ft
Lane Width Adjustment, fLW	0.0	mph
Right-Shoulder Lateral Clearance	6.0	ft
Lateral Clearance Adjustment, fLC	0.0	mph
Interchange Density	1.50	interchange/mi
Interchange Density Adjustment, fID	5.0	mph
Number of Lanes, N	3	
Number of Lanes Adjustment, fN	3.0	mph
Adjusted Free-Flow Speed	55.0	mph
	Regular Freeway	

Adjusted free-flow speed cannot be less than 55 mph.

RESULTS

Adjusted Flow Rate, vp	2481	pcphpl
Adjusted Free-Flow Speed, FFS	55.0	mph
Average Passenger-Car Speed, S		mph
Number of Lanes, N	3	
Density, D		pc/mi/ln
Level of Service, LOS		

HCS: Basic Freeway Sections Release 3.1c

OPERATIONAL ANALYSIS

Highway/Dir. Travel:	NB I-55
From/To:	Between Mallory and Florida
Agency or Company:	Fischbach
Analyst:	GLF
Analysis Time Period:	PM Peak Hour
Jurisdiction:	Memphis, Shelby County, TN
Analysis Year:	2025 DHVs
Date Performed:	June 2001

VOLUME

Volume, V	4486	vph
Peak-Hour Factor, PHF	0.90	
Peak 15-min Volume, v15	1230	v
Number of Lanes, N	3	
Terrain Type	Level	
Grade	0.00	%
Segment Length	0.00	mi
Trucks and Buses	23	%
Trucks and Buses PCE, ET	1.5	
Recreational Vehicles	0	%
Recreational Vehicle PCE, ER	1.2	
Heavy Vehicle Adjustment, fHV	0.90	
Driver Population Adjustment, fP	1.00	
Adjusted Flow Rate, vp	1829	pcphpl

FREE-FLOW SPEED

Free-Flow Speed:	Ideal	
FFS or FFSi	55.0	mph
Lane Width	12.0	ft
Lane Width Adjustment, fLW	0.0	mph
Right-Shoulder Lateral Clearance	6.0	ft
Lateral Clearance Adjustment, fLC	0.0	mph
Interchange Density	1.50	interchange/mi
Interchange Density Adjustment, fID	5.0	mph
Number of Lanes, N	3	
Number of Lanes Adjustment, fN	3.0	mph
Adjusted Free-Flow Speed	55.0	mph
	Regular Freeway	

Adjusted free-flow speed cannot be less than 55 mph.

RESULTS

Adjusted Flow Rate, vp	1829	pcphpl
Adjusted Free-Flow Speed, FFS	55.0	mph
Average Passenger-Car Speed, S	54.2	mph
Number of Lanes, N	3	
Density, D	33.8	pc/mi/ln
Level of Service, LOS	E	

HCS: Basic Freeway Sections Release 3.1c

OPERATIONAL ANALYSIS

Highway/Dir. Travel:	SB I-55
From/To:	Between Mallory and Florida
Agency or Company:	Fischbach
Analyst:	GLF
Analysis Time Period:	AM Peak Hour
Jurisdiction:	Memphis, Shelby County, TN
Analysis Year:	2025 DHVs
Date Performed:	June 2001

VOLUME

Volume, V	4475	vph
Peak-Hour Factor, PHF	0.90	
Peak 15-min Volume, v15	1256	v
Number of Lanes, N	3	
Terrain Type	Level	
Grade	0.00	%
Segment Length	0.00	mi
Trucks and Buses	23	%
Trucks and Buses PCE, ET	1.5	
Recreational Vehicles	0	%
Recreational Vehicle PCE, ER	1.2	
Heavy Vehicle Adjustment, fHV	0.90	
Driver Population Adjustment, fP	1.00	
Adjusted Flow Rate, vp	1867	pcphpl

FREE-FLOW SPEED

Free-Flow Speed:	Ideal	
FFS or FFSi	55.0	mph
Lane Width	12.0	ft
Lane Width Adjustment, fLW	0.0	mph
Right-Shoulder Lateral Clearance	6.0	ft
Lateral Clearance Adjustment, fLC	0.0	mph
Interchange Density	1.50	interchange/mi
Interchange Density Adjustment, fID	5.0	mph
Number of Lanes, N	3	
Number of Lanes Adjustment, fN	3.0	mph
Adjusted Free-Flow Speed	55.0	mph
	Regular Freeway	

Adjusted free-flow speed cannot be less than 55 mph.

RESULTS

Adjusted Flow Rate, vp	1867	pcphpl
Adjusted Free-Flow Speed, FFS	55.0	mph
Average Passenger-Car Speed, S	54.0	mph
Number of Lanes, N	3	
Density, D	34.6	pc/mi/ln
Level of Service, LOS	E	

HCS: Basic Freeway Sections Release 3.1c

OPERATIONAL ANALYSIS

Highway/Dir. Travel:	SB I-55
From/To:	Between Mallory and Florida
Agency or Company:	Fischbach
Analyst:	GLF
Analysis Time Period:	PM Peak Hour
Jurisdiction:	Memphis, Shelby County, TN
Analysis Year:	2025 DHVs
Date Performed:	June 2001

VOLUME

Volume, V	6559	vph
Peak-Hour Factor, PHF	0.90	
Peak 15-min Volume, v15	1756	v
Number of Lanes, N	3	
Terrain Type	Level	
Grade	0.00	%
Segment Length	0.00	mi
Trucks and Buses	23	%
Trucks and Buses PCE, ET	1.5	
Recreational Vehicles	0	%
Recreational Vehicle PCE, ER	1.2	
Heavy Vehicle Adjustment, fHV	0.90	
Driver Population Adjustment, fP	1.00	
Adjusted Flow Rate, vp	2611	pcphpl

FREE-FLOW SPEED

Free-Flow Speed:	Ideal	
FFS or FFSi	55.0	mph
Lane Width	12.0	ft
Lane Width Adjustment, fLW	0.0	mph
Right-Shoulder Lateral Clearance	6.0	ft
Lateral Clearance Adjustment, fLC	0.0	mph
Interchange Density	1.50	interchange/mi
Interchange Density Adjustment, fID	5.0	mph
Number of Lanes, N	3	
Number of Lanes Adjustment, fN	3.0	mph
Adjusted Free-Flow Speed	55.0	mph
	Regular Freeway	

Adjusted free-flow speed cannot be less than 55 mph.

RESULTS

Adjusted Flow Rate, vp	2611	pcphpl
Adjusted Free-Flow Speed, FFS	55.0	mph
Average Passenger-Car Speed, S		mph
Number of Lanes, N	3	
Density, D		pc/mi/ln
Level of Service, LOS		

HCS: Basic Freeway Sections Release 3.1c

OPERATIONAL ANALYSIS

Highway/Dir. Travel:	EB I-55
From/To:	East of Florida Street
Agency or Company:	Fischbach
Analyst:	GLF
Analysis Time Period:	AM Peak Hour
Jurisdiction:	Memphis, Shelby County, TN
Analysis Year:	2025 DHVs
Date Performed:	June 2001

VOLUME

Volume, V	4151	vph
Peak-Hour Factor, PHF	0.90	
Peak 15-min Volume, v15	1166	v
Number of Lanes, N	3	
Terrain Type	Level	
Grade	0.00	%
Segment Length	0.00	mi
Trucks and Buses	23	%
Trucks and Buses PCE, ET	1.5	
Recreational Vehicles	0	%
Recreational Vehicle PCE, ER	1.2	
Heavy Vehicle Adjustment, fHV	0.90	
Driver Population Adjustment, fP	1.00	
Adjusted Flow Rate, vp	1734	pcphpl

FREE-FLOW SPEED

Free-Flow Speed:	Ideal	
FFS or FFSi	55.0	mph
Lane Width	12.0	ft
Lane Width Adjustment, fLW	0.0	mph
Right-Shoulder Lateral Clearance	6.0	ft
Lateral Clearance Adjustment, fLC	0.0	mph
Interchange Density	1.50	interchange/mi
Interchange Density Adjustment, fID	5.0	mph
Number of Lanes, N	3	
Number of Lanes Adjustment, fN	3.0	mph
Adjusted Free-Flow Speed	55.0	mph
	Regular Freeway	

Adjusted free-flow speed cannot be less than 55 mph.

RESULTS

Adjusted Flow Rate, vp	1734	pcphpl
Adjusted Free-Flow Speed, FFS	55.0	mph
Average Passenger-Car Speed, S	55.0	mph
Number of Lanes, N	3	
Density, D	31.5	pc/mi/ln
Level of Service, LOS	D	

HCS: Basic Freeway Sections Release 3.1c

OPERATIONAL ANALYSIS

Highway/Dir. Travel:	EB I-55
From/To:	East of Florida Street
Agency or Company:	Fischbach
Analyst:	GLF
Analysis Time Period:	PM Peak Hour
Jurisdiction:	Memphis, Shelby County, TN
Analysis Year:	2025 DHVs
Date Performed:	June 2001

VOLUME

Volume, V	5767	vph
Peak-Hour Factor, PHF	0.90	
Peak 15-min Volume, v15	1536	v
Number of Lanes, N	3	
Terrain Type	Level	
Grade	0.00	%
Segment Length	0.00	mi
Trucks and Buses	23	%
Trucks and Buses PCE, ET	1.5	
Recreational Vehicles	0	%
Recreational Vehicle PCE, ER	1.2	
Heavy Vehicle Adjustment, fHV	0.90	
Driver Population Adjustment, fP	1.00	
Adjusted Flow Rate, vp	2284	pcphpl

FREE-FLOW SPEED

Free-Flow Speed:	Ideal	
FFS or FFSi	55.0	mph
Lane Width	12.0	ft
Lane Width Adjustment, fLW	0.0	mph
Right-Shoulder Lateral Clearance	6.0	ft
Lateral Clearance Adjustment, fLC	0.0	mph
Interchange Density	1.50	interchange/mi
Interchange Density Adjustment, fID	5.0	mph
Number of Lanes, N	3	
Number of Lanes Adjustment, fN	3.0	mph
Adjusted Free-Flow Speed	55.0	mph
	Regular Freeway	

Adjusted free-flow speed cannot be less than 55 mph.

RESULTS

Adjusted Flow Rate, vp	2284	pcphpl
Adjusted Free-Flow Speed, FFS	55.0	mph
Average Passenger-Car Speed, S	55.0	mph
Number of Lanes, N	3	
Density, D	41.5	pc/mi/ln
Level of Service, LOS	E	

HCS: Basic Freeway Sections Release 3.1c

OPERATIONAL ANALYSIS

Highway/Dir. Travel:	WB I-55
From/To:	East of Florida Street
Agency or Company:	Fischbach
Analyst:	GLF
Analysis Time Period:	AM Peak Hour
Jurisdiction:	Memphis, Shelby County, TN
Analysis Year:	2025 DHVs
Date Performed:	June 2001

VOLUME

Volume, V	5710	vph
Peak-Hour Factor, PHF	0.90	
Peak 15-min Volume, v15	1468	v
Number of Lanes, N	3	
Terrain Type	Level	
Grade	0.00	%
Segment Length	0.00	mi
Trucks and Buses	23	%
Trucks and Buses PCE, ET	1.5	
Recreational Vehicles	0	%
Recreational Vehicle PCE, ER	1.2	
Heavy Vehicle Adjustment, fHV	0.90	
Driver Population Adjustment, fP	1.00	
Adjusted Flow Rate, vp	2183	pcphpl

FREE-FLOW SPEED

Free-Flow Speed:	Ideal	
FFS or FFSi	55.0	mph
Lane Width	12.0	ft
Lane Width Adjustment, fLW	0.0	mph
Right-Shoulder Lateral Clearance	6.0	ft
Lateral Clearance Adjustment, fLC	0.0	mph
Interchange Density	1.50	interchange/mi
Interchange Density Adjustment, fID	5.0	mph
Number of Lanes, N	3	
Number of Lanes Adjustment, fN	3.0	mph
Adjusted Free-Flow Speed	55.0	mph
	Regular Freeway	

Adjusted free-flow speed cannot be less than 55 mph.

RESULTS

Adjusted Flow Rate, vp	2183	pcphpl
Adjusted Free-Flow Speed, FFS	55.0	mph
Average Passenger-Car Speed, S	51.0	mph
Number of Lanes, N	3	
Density, D	42.8	pc/mi/ln
Level of Service, LOS	E	

HCS: Basic Freeway Sections Release 3.1c

OPERATIONAL ANALYSIS

Highway/Dir. Travel:	WB I-55
From/To:	East of Florida Street
Agency or Company:	Fischbach
Analyst:	GLF
Analysis Time Period:	PM Peak Hour
Jurisdiction:	Memphis, Shelby County, TN
Analysis Year:	2025 DHVs
Date Performed:	June 2001

VOLUME

Volume, V	4146	vph
Peak-Hour Factor, PHF	0.90	
Peak 15-min Volume, v15	1136	v
Number of Lanes, N	3	
Terrain Type	Level	
Grade	0.00	%
Segment Length	0.00	mi
Trucks and Buses	23	%
Trucks and Buses PCE, ET	1.5	
Recreational Vehicles	0	%
Recreational Vehicle PCE, ER	1.2	
Heavy Vehicle Adjustment, fHV	0.90	
Driver Population Adjustment, fP	1.00	
Adjusted Flow Rate, vp	1689	pcphpl

FREE-FLOW SPEED

Free-Flow Speed:	Ideal	
FFS or FFSi	55.0	mph
Lane Width	12.0	ft
Lane Width Adjustment, fLW	0.0	mph
Right-Shoulder Lateral Clearance	6.0	ft
Lateral Clearance Adjustment, fLC	0.0	mph
Interchange Density	1.50	interchange/mi
Interchange Density Adjustment, fID	5.0	mph
Number of Lanes, N	3	
Number of Lanes Adjustment, fN	3.0	mph
Adjusted Free-Flow Speed	55.0	mph
	Regular Freeway	

Adjusted free-flow speed cannot be less than 55 mph.

RESULTS

Adjusted Flow Rate, vp	1689	pcphpl
Adjusted Free-Flow Speed, FFS	55.0	mph
Average Passenger-Car Speed, S	55.0	mph
Number of Lanes, N	3	
Density, D	30.7	pc/mi/ln
Level of Service, LOS	D	

RAMP JUNCTIONS

HCS2000: Ramps and Ramp Junctions Release 4.1

Diverge Analysis

Analyst:	Fischbach
Agency/Co.:	Fischbach
Date performed:	June 2001
Analysis time period:	AM Peak Hour
Freeway/dir or travel:	NB I-55
Junction:	Off-ramp to S. Parkway
Jurisdiction:	Memphis, TN
Analysis Year:	2025 DHVs
Description:	10019

Freeway Data

Type of analysis	Diverge	
Number of lanes in freeway	3	
Free-flow speed on freeway	55.0	mph
Volume on freeway	5840	vph

Off Ramp Data

Side of freeway	Right	
Number of lanes in ramp	1	
Free-Flow speed on ramp	35.0	mph
Volume on ramp	483	vph
Length of first accel/decel lane	325	ft
Length of second accel/decel lane		ft

Adjacent Ramp Data (if one exists)

Does adjacent ramp exist?	Yes	
Volume on adjacent ramp	131	vph
Position of adjacent ramp	Downstream	
Type of adjacent ramp	On	
Distance to adjacent ramp	500	ft

Conversion to pc/h Under Base Conditions

Junction Components	Freeway		Ramp		Adjacent Ramp		
Volume, V (vph)	5840		483		131		vph
Peak-hour factor, PHF	0.90		0.90		0.90		
Peak 15-min volume, v15	1622		134		36		v
Trucks and buses	24		7		7		%
Recreational vehicles	0		0		0		%
Terrain type:	Level		Level		Level		
Grade	0.00	%	0.00	%	0.00	%	
Length	0.00	mi	0.00	mi	0.00	mi	
Trucks and buses PCE, ET	1.5		1.5		1.5		
Recreational vehicle PCE, ER	1.2		1.2		1.2		
Heavy vehicle adjustment, fHV	0.893		0.966		0.966		
Driver population factor, fP	1.00		1.00		1.00		
Flow rate, vp	7268		555		151		pcph

Estimation of V12 Diverge Areas

L_{EQ} = 0.00 (Equation 25-8 or 25-9)

P_{FD} = 0.553 Using Equation 5

$v_{12} = v_R + (v_F - v_R) P_{FD}$ = 4266 pc/h

Capacity Checks

	Actual	Maximum	LOS F?
$v_{Fi} = v_F$	7268	6750	Yes
v_{12}	4266	4400	No
$v_{FO} = v_F - v_R$	6713	6750	No
v_R	555	2000	No

Level of Service Determination (if not F)

Density, $D = 4.252 + 0.0086 v_R - 0.009 L_D$ = 38.0 pc/mi/ln

Level of service for ramp-freeway junction areas of influence F

Speed Estimation

Intermediate speed variable, D_S = 0.478

Space mean speed in ramp influence area, S_R = 49 mph

Space mean speed in outer lanes, S_O = 52.5 mph

Space mean speed for all vehicles, S = 50.3 mph

HCS2000: Ramps and Ramp Junctions Release 4.1

Diverge Analysis

Analyst:	Fischbach
Agency/Co.:	Fischbach
Date performed:	June 2001
Analysis time period:	PM Peak Hour
Freeway/dir or travel:	NB I-55
Junction:	Off-ramp to S. Parkway
Jurisdiction:	Memphis, TN
Analysis Year:	2025 DHVs
Description:	10019

Freeway Data

Type of analysis	Diverge	
Number of lanes in freeway	3	
Free-flow speed on freeway	55.0	mph
Volume on freeway	4750	vph

Off Ramp Data

Side of freeway	Right	
Number of lanes in ramp	1	
Free-Flow speed on ramp	35.0	mph
Volume on ramp	417	vph
Length of first accel/decel lane	325	ft
Length of second accel/decel lane		ft

Adjacent Ramp Data (if one exists)

Does adjacent ramp exist?	Yes	
Volume on adjacent ramp	263	vph
Position of adjacent ramp	Downstream	
Type of adjacent ramp	On	
Distance to adjacent ramp	500	ft

Conversion to pc/h Under Base Conditions

Junction Components	Freeway		Ramp		Adjacent Ramp		
Volume, V (vph)	4750		417		263		vph
Peak-hour factor, PHF	0.90		0.90		0.90		
Peak 15-min volume, v15	1319		116		73		v
Trucks and buses	24		7		7		%
Recreational vehicles	0		0		0		%
Terrain type:	Level		Level		Level		
Grade	0.00	%	0.00	%	0.00	%	
Length	0.00	mi	0.00	mi	0.00	mi	
Trucks and buses PCE, ET	1.5		1.5		1.5		
Recreational vehicle PCE, ER	1.2		1.2		1.2		
Heavy vehicle adjustment, fHV	0.893		0.966		0.966		
Driver population factor, fP	1.00		1.00		1.00		
Flow rate, vp	5911		480		302		pcph

Estimation of V12 Diverge Areas

L_{EQ} = 0.00 (Equation 25-8 or 25-9)

P_{FD} = 0.590 Using Equation 5

$v_{12} = v_R + (v_F - v_R) P_{FD}$ = 3685 pc/h

Capacity Checks

	Actual	Maximum	LOS F?
$v_{Fi} = v_F$	5911	6750	No
v_{12}	3685	4400	No
$v_{FO} = v_F - v_R$	5431	6750	No
v_R	480	2000	No

Level of Service Determination (if not F)

Density, $D = 4.252 + 0.0086 v_R - 0.009 L_D$ = 33.0 pc/mi/ln

Level of service for ramp-freeway junction areas of influence D

Speed Estimation

Intermediate speed variable, D_S = 0.471

Space mean speed in ramp influence area, S_R = 49 mph

Space mean speed in outer lanes, S_O = 55.6 mph

Space mean speed for all vehicles, S = 51.2 mph

HCS2000: Ramps and Ramp Junctions Release 4.1

Merge Analysis

Analyst:	Fischbach
Agency/Co.:	Fischbach
Date performed:	June 2001
Analysis time period:	AM Peak Hour
Freeway/dir or travel:	NB I-55
Junction:	On-ramp from S. Parkway
Jurisdiction:	Memphis, TN
Analysis Year:	2025 DHVs
Description:	10019

Freeway Data

Type of analysis	50.9	
Number of lanes in freeway	3	
Free-flow speed on freeway	55.0	mph
Volume on freeway	5357	vph

On Ramp Data

Side of freeway	Right	
Number of lanes in ramp	1	
Free-flow speed on ramp	35.0	mph
Volume on ramp	131	vph
Length of first accel/decel lane	450	ft
Length of second accel/decel lane		ft

Adjacent Ramp Data (if one exists)

Does adjacent ramp exist?	Yes	
Volume on adjacent Ramp	483	vph
Position of adjacent Ramp	Upstream	
Type of adjacent Ramp	Off	
Distance to adjacent Ramp	500	ft

Conversion to pc/h Under Base Conditions

Junction Components	Freeway	Ramp	Adjacent Ramp	
Volume, V (vph)	5357	131	483	vph
Peak-hour factor, PHF	0.90	0.90	0.90	
Peak 15-min volume, v15	1488	36	134	v
Trucks and buses	24	7	7	%
Recreational vehicles	0	0	0	%
Terrain type:	Level	Level	Level	
Grade	%	%	%	
Length	mi	mi	mi	
Trucks and buses PCE, ET	1.5	1.5	1.5	
Recreational vehicle PCE, ER	1.2	1.2	1.2	
Heavy vehicle adjustment, fHV	0.893	0.966	0.966	
Driver population factor, fP	1.00	1.00	1.00	
Flow rate, vp	6666	151	555	pcph

Estimation of V12 Merge Areas

L_{EQ} = (Equation 25-2 or 25-3)

P_{FM} = 0.590 Using Equation 1

$v_{12} = v_F (P_{FM})$ = 3934 pc/h

Capacity Checks

	Actual	Maximum	LOS F?
v_{FO}	6817	6750	Yes
v_{R12}	4085	4600	No

Level of Service Determination (if not F)

Density, $D = 5.475 + 0.00734 v_R + 0.0078 v_R - 0.00627 L_A$ = 34.4 pc/mi/ln

Level of service for ramp-freeway junction areas of influence F

Speed Estimation

Intermediate speed variable, M_S = 0.521

Space mean speed in ramp influence area, S_R = 48.2 mph

Space mean speed in outer lanes, S_O = 45.9 mph

Space mean speed for all vehicles, S = 47.3 mph

HCS2000: Ramps and Ramp Junctions Release 4.1

Merge Analysis

Analyst:	Fischbach
Agency/Co.:	Fischbach
Date performed:	June 2001
Analysis time period:	PM Peak Hour
Freeway/dir or travel:	NB I-55
Junction:	on from S. Parkway
Jurisdiction:	Memphis, TN
Analysis Year:	2025 DHVs
Description:	10019

Freeway Data

Type of analysis	51.6	
Number of lanes in freeway	3	
Free-flow speed on freeway	55.0	mph
Volume on freeway	4333	vph

On Ramp Data

Side of freeway	Right	
Number of lanes in ramp	1	
Free-flow speed on ramp	35.0	mph
Volume on ramp	263	vph
Length of first accel/decel lane	450	ft
Length of second accel/decel lane		ft

Adjacent Ramp Data (if one exists)

Does adjacent ramp exist?	Yes	
Volume on adjacent Ramp	417	vph
Position of adjacent Ramp	Upstream	
Type of adjacent Ramp	Off	
Distance to adjacent Ramp	500	ft

Conversion to pc/h Under Base Conditions

Junction Components	Freeway	Ramp	Adjacent Ramp	
Volume, V (vph)	4333	263	417	vph
Peak-hour factor, PHF	0.90	0.90	0.90	
Peak 15-min volume, v15	1204	73	116	v
Trucks and buses	24	7	7	%
Recreational vehicles	0	0	0	%
Terrain type:	Level	Level	Level	
Grade	%	%	%	
Length	mi	mi	mi	
Trucks and buses PCE, ET	1.5	1.5	1.5	
Recreational vehicle PCE, ER	1.2	1.2	1.2	
Heavy vehicle adjustment, fHV	0.893	0.966	0.966	
Driver population factor, fP	1.00	1.00	1.00	
Flow rate, vp	5392	302	480	pcph

Estimation of V12 Merge Areas

L_{EQ} = (Equation 25-2 or 25-3)

P_{FM} = 0.590 Using Equation 1

$v_{12} = v_F (P_{FM})$ = 3182 pc/h

Capacity Checks

	Actual	Maximum	LOS F?
v_{FO}	5694	6750	No
v_{R12}	3484	4600	No

Level of Service Determination (if not F)

Density, $D = 5.475 + 0.00734 v_R + 0.0078 v_{12} - 0.00627 L_A$ = 29.7 pc/mi/ln

Level of service for ramp-freeway junction areas of influence D

Speed Estimation

Intermediate speed variable, M_S = 0.417

Space mean speed in ramp influence area, S_R = 49.6 mph

Space mean speed in outer lanes, S_O = 48.8 mph

Space mean speed for all vehicles, S = 49.3 mph

HCS2000: Ramps and Ramp Junctions Release 4.1

Diverge Analysis

Analyst:	Fischbach
Agency/Co.:	Fischbach
Date performed:	June 2001
Analysis time period:	AM Peak Hour
Freeway/dir or travel:	SB I-55
Junction:	Off-ramp to S. Parkway
Jurisdiction:	Memphis, TN
Analysis Year:	2025 DHVs
Description:	10019

Freeway Data

Type of analysis	Diverge	
Number of lanes in freeway	3	
Free-flow speed on freeway	55.0	mph
Volume on freeway	4565	vph

Off Ramp Data

Side of freeway	Right	
Number of lanes in ramp	1	
Free-Flow speed on ramp	35.0	mph
Volume on ramp	256	vph
Length of first accel/decel lane	275	ft
Length of second accel/decel lane		ft

Adjacent Ramp Data (if one exists)

Does adjacent ramp exist?	Yes	
Volume on adjacent ramp	252	vph
Position of adjacent ramp	Downstream	
Type of adjacent ramp	On	
Distance to adjacent ramp	700	ft

Conversion to pc/h Under Base Conditions

Junction Components	Freeway		Ramp		Adjacent Ramp		
Volume, V (vph)	4565		256		252		vph
Peak-hour factor, PHF	0.90		0.90		0.90		
Peak 15-min volume, v15	1268		71		70		v
Trucks and buses	24		7		7		%
Recreational vehicles	0		0		0		%
Terrain type:	Level		Level		Level		
Grade	0.00	%	0.00	%	0.00	%	
Length	0.00	mi	0.00	mi	0.00	mi	
Trucks and buses PCE, ET	1.5		1.5		1.5		
Recreational vehicle PCE, ER	1.2		1.2		1.2		
Heavy vehicle adjustment, fHV	0.893		0.966		0.966		
Driver population factor, fP	1.00		1.00		1.00		
Flow rate, vp	5681		294		290		pcph

Estimation of V12 Diverge Areas

L_{EQ} = 0.00 (Equation 25-8 or 25-9)

P_{FD} = 0.604 Using Equation 5

$v_{12} = v_R + (v_F - v_R) P_{FD}$ = 3550 pc/h

Capacity Checks

	Actual	Maximum	LOS F?
$v_{Fi} = v_F$	5681	6750	No
v_{12}	3550	4400	No
$v_{FO} = v_F - v_R$	5387	6750	No
v_R	294	2000	No

Level of Service Determination (if not F)

Density, $D_R = 4.252 + 0.0086\, v_{12} - 0.009\, L_D$ = 32.3 pc/mi/ln

Level of service for ramp-freeway junction areas of influence D

Speed Estimation

Intermediate speed variable, D_S = 0.454

Space mean speed in ramp influence area, S_R = 49 mph

Space mean speed in outer lanes, S_O = 55.9 mph

Space mean speed for all vehicles, S = 51.4 mph

HCS2000: Ramps and Ramp Junctions Release 4.1

Diverge Analysis

Analyst:	Fischbach
Agency/Co.:	Fischbach
Date performed:	June 2001
Analysis time period:	PM Peak Hour
Freeway/dir or travel:	SB I-55
Junction:	Off-ramp to S. Parkway
Jurisdiction:	Memphis, TN
Analysis Year:	2025 DHVs
Description:	10019

Freeway Data

Type of analysis	Diverge	
Number of lanes in freeway	3	
Free-flow speed on freeway	55.0	mph
Volume on freeway	5317	vph

Off Ramp Data

Side of freeway	Right	
Number of lanes in ramp	1	
Free-Flow speed on ramp	35.0	mph
Volume on ramp	228	vph
Length of first accel/decel lane	275	ft
Length of second accel/decel lane		ft

Adjacent Ramp Data (if one exists)

Does adjacent ramp exist?	Yes	
Volume on adjacent ramp	758	vph
Position of adjacent ramp	Downstream	
Type of adjacent ramp	On	
Distance to adjacent ramp	700	ft

Conversion to pc/h Under Base Conditions

Junction Components	Freeway		Ramp		Adjacent Ramp		
Volume, V (vph)	5317		228		758		vph
Peak-hour factor, PHF	0.90		0.90		0.90		
Peak 15-min volume, v15	1477		63		211		v
Trucks and buses	24		7		7		%
Recreational vehicles	0		0		0		%
Terrain type:	Level		Level		Level		
Grade	0.00	%	0.00	%	0.00	%	
Length	0.00	mi	0.00	mi	0.00	mi	
Trucks and buses PCE, ET	1.5		1.5		1.5		
Recreational vehicle PCE, ER	1.2		1.2		1.2		
Heavy vehicle adjustment, fHV	0.893		0.966		0.966		
Driver population factor, fP	1.00		1.00		1.00		
Flow rate, vp	6617		262		872		pcph

Estimation of V12 Diverge Areas

L_{EQ} = 0.00 (Equation 25-8 or 25-9)

P_{FD} = 0.583 Using Equation 5

$v_{12} = v_R + (v_F - v_R) P_{FD}$ = 3964 pc/h

Capacity Checks

	Actual	Maximum	LOS F?
$v_{Fi} = v_F$	6617	6750	No
v_{12}	3964	4400	No
$v_{FO} = v_F - v_R$	6355	6750	No
v_R	262	2000	No

Level of Service Determination (if not F)

Density, $D = 4.252 + 0.0086 v_R - 0.009 L_D$ = 35.9 pc/mi/ln

Level of service for ramp-freeway junction areas of influence E

Speed Estimation

Intermediate speed variable, D_S = 0.452

Space mean speed in ramp influence area, S_R = 49 mph

Space mean speed in outer lanes, S_O = 53.9 mph

Space mean speed for all vehicles, S = 50.9 mph

HCS2000: Ramps and Ramp Junctions Release 4.1

Merge Analysis

Analyst:	Fischbach
Agency/Co.:	Fischbach
Date performed:	June 2001
Analysis time period:	AM Peak Hour
Freeway/dir or travel:	SB I-55
Junction:	On-ramp from S. Parkway
Jurisdiction:	Memphis, TN
Analysis Year:	2025 DHVs
Description:	10019

Freeway Data

Type of analysis	51.6	
Number of lanes in freeway	3	
Free-flow speed on freeway	55.0	mph
Volume on freeway	4309	vph

On Ramp Data

Side of freeway	Right	
Number of lanes in ramp	1	
Free-flow speed on ramp	35.0	mph
Volume on ramp	252	vph
Length of first accel/decel lane	500	ft
Length of second accel/decel lane		ft

Adjacent Ramp Data (if one exists)

Does adjacent ramp exist?	Yes	
Volume on adjacent Ramp	256	vph
Position of adjacent Ramp	Upstream	
Type of adjacent Ramp	Off	
Distance to adjacent Ramp	700	ft

Conversion to pc/h Under Base Conditions

Junction Components	Freeway	Ramp	Adjacent Ramp	
Volume, V (vph)	4309	252	256	vph
Peak-hour factor, PHF	0.90	0.90	0.90	
Peak 15-min volume, v15	1197	70	71	v
Trucks and buses	24	7	7	%
Recreational vehicles	0	0	0	%
Terrain type:	Level	Level	Level	
Grade	%	%	%	
Length	mi	mi	mi	
Trucks and buses PCE, ET	1.5	1.5	1.5	
Recreational vehicle PCE, ER	1.2	1.2	1.2	
Heavy vehicle adjustment, fHV	0.893	0.966	0.966	
Driver population factor, fP	1.00	1.00	1.00	
Flow rate, vp	5362	290	294	pcph

_____Estimation of V12 Merge Areas_____

L_{EQ} = (Equation 25-2 or 25-3)

P_{FM} = 0.591 Using Equation 1

$v_{12} = v_F (P_{FM})$ = 3172 pc/h

_____Capacity Checks_____

	Actual	Maximum	LOS F?
v_{FO}	5652	6750	No
v_{R12}	3462	4600	No

_____Level of Service Determination (if not F)_____

Density, $D = 5.475 + 0.00734 v_R + 0.0078 v_{12} - 0.00627 L_A$ = 29.2 pc/mi/ln

Level of service for ramp-freeway junction areas of influence D

_____Speed Estimation_____

Intermediate speed variable, M_S = 0.410

Space mean speed in ramp influence area, S_R = 49.7 mph

Space mean speed in outer lanes, S_O = 48.9 mph

Space mean speed for all vehicles, S = 49.4 mph

HCS2000: Ramps and Ramp Junctions Release 4.1

Merge Analysis

Analyst:	Fischbach
Agency/Co.:	Fischbach
Date performed:	June 2001
Analysis time period:	PM Peak Hour
Freeway/dir or travel:	SB I-55
Junction:	On-ramp from S. Parkway
Jurisdiction:	Memphis, TN
Analysis Year:	2025 DHVs
Description:	10019

Freeway Data

Type of analysis	50.6	
Number of lanes in freeway	3	
Free-flow speed on freeway	55.0	mph
Volume on freeway	5089	vph

On Ramp Data

Side of freeway	Right	
Number of lanes in ramp	1	
Free-flow speed on ramp	35.0	mph
Volume on ramp	758	vph
Length of first accel/decel lane	500	ft
Length of second accel/decel lane		ft

Adjacent Ramp Data (if one exists)

Does adjacent ramp exist?	Yes	
Volume on adjacent Ramp	228	vph
Position of adjacent Ramp	Upstream	
Type of adjacent Ramp	Off	
Distance to adjacent Ramp	700	ft

Conversion to pc/h Under Base Conditions

Junction Components	Freeway	Ramp	Adjacent Ramp	
Volume, V (vph)	5089	758	228	vph
Peak-hour factor, PHF	0.90	0.90	0.90	
Peak 15-min volume, v15	1414	211	63	v
Trucks and buses	24	7	7	%
Recreational vehicles	0	0	0	%
Terrain type:	Level	Level	Level	
Grade	%	%	%	
Length	mi	mi	mi	
Trucks and buses PCE, ET	1.5	1.5	1.5	
Recreational vehicle PCE, ER	1.2	1.2	1.2	
Heavy vehicle adjustment, fHV	0.893	0.966	0.966	
Driver population factor, fP	1.00	1.00	1.00	
Flow rate, vp	6333	872	262	pcph

```
_____________________________Estimation of V12 Merge Areas_____________________________

                  L  =            (Equation 25-2 or 25-3)
                   EQ
                  P  =    0.591   Using Equation  1
                   FM
                  v  = v  (P  ) =  3746   pc/h
                   12   F   FM

___________________________________Capacity Checks___________________________________

                           Actual        Maximum         LOS F?
     v                     7205          6750            Yes
      FO
     v                     4618          4600            Yes
      R12

__________________Level of Service Determination (if not F)____________________

Density, D = 5.475 + 0.00734 v  + 0.0078 v   - 0.00627 L   =   38.0
pc/mi/ln
          R                   R           12            A
Level of service for ramp-freeway junction areas of influence  F

_____________________________________Speed Estimation_____________________________________

Intermediate speed variable,                 M  = 0.681
                                              S
Space mean speed in ramp influence area,     S  = 46.1    mph
                                              R
Space mean speed in outer lanes,             S  = 46.7    mph
                                              0
Space mean speed for all vehicles,           S  = 46.4    mph
```

HCS2000: Ramps and Ramp Junctions Release 4.1

Merge Analysis

Analyst:	Fischbach
Agency/Co.:	Fischbach
Date performed:	June 2001
Analysis time period:	AM Peak Hour
Freeway/dir or travel:	NB 55 @ n. on-ramp fr. Mallory
Junction:	N. on-ramp fr. Mallory
Jurisdiction:	Memphis, TN
Analysis Year:	2025 DHVs
Description:	10019

Freeway Data

Type of analysis	50.6	
Number of lanes in freeway	3	
Free-flow speed on freeway	55.0	mph
Volume on freeway	5257	vph

On Ramp Data

Side of freeway	Right	
Number of lanes in ramp	1	
Free-flow speed on ramp	35.0	mph
Volume on ramp	583	vph
Length of first accel/decel lane	375	ft
Length of second accel/decel lane		ft

Adjacent Ramp Data (if one exists)

Does adjacent ramp exist?	No	
Volume on adjacent Ramp		vph
Position of adjacent Ramp		
Type of adjacent Ramp		
Distance to adjacent Ramp		ft

Conversion to pc/h Under Base Conditions

Junction Components	Freeway	Ramp	Adjacent Ramp	
Volume, V (vph)	5257	583		vph
Peak-hour factor, PHF	0.90	0.90		
Peak 15-min volume, v15	1460	162		v
Trucks and buses	24	7		%
Recreational vehicles	0	0		%
Terrain type:	Level	Level	Level	
Grade	%	%	%	
Length	mi	mi	mi	
Trucks and buses PCE, ET	1.5	1.5		
Recreational vehicle PCE, ER	1.2	1.2		
Heavy vehicle adjustment, fHV	0.893	0.966		
Driver population factor, fP	1.00	1.00		
Flow rate, vp	6542	670		pcph

```
_____________________________Estimation of V12 Merge Areas_____________________________

                  L  =    0.00    (Equation 25-2 or 25-3)
                   EQ
                  P  =    0.588   Using Equation  1
                   FM
                  v  = v  (P  ) =  3847   pc/h
                   12   F   FM

___________________________________Capacity Checks___________________________________

                           Actual        Maximum         LOS F?
     v                     7212          6750            Yes
      FO
     v                     4517          4600            No
      R12

_________________Level of Service Determination (if not F)_____________________

Density, D = 5.475 + 0.00734 v  + 0.0078 v   - 0.00627 L   =   38.0
pc/mi/ln
          R                   R           12            A
Level of service for ramp-freeway junction areas of influence  F

_____________________________________Speed Estimation_____________________________________

Intermediate speed variable,                M  = 0.652
                                             S
Space mean speed in ramp influence area,    S  = 46.5    mph
                                             R
Space mean speed in outer lanes,            S  = 46.1    mph
                                             0
Space mean speed for all vehicles,          S  = 46.4    mph
_____________________________________________________________________________________
```

HCS2000: Ramps and Ramp Junctions Release 4.1

Merge Analysis

Analyst:	Fischbach
Agency/Co.:	Fischbach
Date performed:	2025 DHVs
Analysis time period:	PM Peak Hour
Freeway/dir or travel:	NB 55 @ n. on-ramp fr. Mallory
Junction:	N.on-ramp fr. Mallory
Jurisdiction:	Memphis, TN
Analysis Year:	2025 DHVs
Description:	10019

Freeway Data

Type of analysis	51.3	
Number of lanes in freeway	3	
Free-flow speed on freeway	55.0	mph
Volume on freeway	3887	vph

On Ramp Data

Side of freeway	Right	
Number of lanes in ramp	1	
Free-flow speed on ramp	35.0	mph
Volume on ramp	863	vph
Length of first accel/decel lane	375	ft
Length of second accel/decel lane		ft

Adjacent Ramp Data (if one exists)

Does adjacent ramp exist?	No	
Volume on adjacent Ramp		vph
Position of adjacent Ramp		
Type of adjacent Ramp		
Distance to adjacent Ramp		ft

Conversion to pc/h Under Base Conditions

Junction Components	Freeway	Ramp	Adjacent Ramp	
Volume, V (vph)	3887	863		vph
Peak-hour factor, PHF	0.90	0.90		
Peak 15-min volume, v15	1080	240		v
Trucks and buses	24	7		%
Recreational vehicles	0	0		%
Terrain type:	Level	Level	Level	
Grade	%	%	%	
Length	mi	mi	mi	
Trucks and buses PCE, ET	1.5	1.5		
Recreational vehicle PCE, ER	1.2	1.2		
Heavy vehicle adjustment, fHV	0.893	0.966		
Driver population factor, fP	1.00	1.00		
Flow rate, vp	4837	992		pcph

```
_____________________________Estimation of V12 Merge Areas_____________________________

                  L  =    0.00    (Equation 25-2 or 25-3)
                   EQ
                  P  =    0.588   Using Equation  1
                   FM
                  v  = v  (P  ) =  2844   pc/h
                   12   F   FM

___________________________________Capacity Checks___________________________________

                           Actual        Maximum         LOS F?
     v                     5829          6750            No
      FO
     v                     3836          4600            No
      R12

_________________Level of Service Determination (if not F)_____________________

Density, D = 5.475 + 0.00734 v  + 0.0078 v   - 0.00627 L   =   32.6
pc/mi/ln
          R                   R           12            A
Level of service for ramp-freeway junction areas of influence  D

_____________________________________Speed Estimation_____________________________________

Intermediate speed variable,                 M  = 0.475
                                              S
Space mean speed in ramp influence area,     S  = 48.8    mph
                                              R
Space mean speed in outer lanes,             S  = 49.6    mph
                                              0
Space mean speed for all vehicles,           S  = 49.1    mph
_____________________________________________________________________________________
```

HCS2000: Ramps and Ramp Junctions Release 4.1

Merge Analysis

Analyst:	Fischbach
Agency/Co.:	Fischbach
Date performed:	June 2001
Analysis time period:	AM Peak Hour
Freeway/dir or travel:	SB 55
Junction:	N. on-ramp fr. Mallory
Jurisdiction:	Memphis, TN
Analysis Year:	2025 DHVs
Description:	10019

Freeway Data

Type of analysis	49.1	
Number of lanes in freeway	2	
Free-flow speed on freeway	55.0	mph
Volume on freeway	3644	vph

On Ramp Data

Side of freeway	Right	
Number of lanes in ramp	1	
Free-flow speed on ramp	35.0	mph
Volume on ramp	285	vph
Length of first accel/decel lane	500	ft
Length of second accel/decel lane		ft

Adjacent Ramp Data (if one exists)

Does adjacent ramp exist?	No	
Volume on adjacent Ramp		vph
Position of adjacent Ramp		
Type of adjacent Ramp		
Distance to adjacent Ramp		ft

Conversion to pc/h Under Base Conditions

Junction Components	Freeway	Ramp	Adjacent Ramp	
Volume, V (vph)	3644	285		vph
Peak-hour factor, PHF	0.90	0.90		
Peak 15-min volume, v15	1012	79		v
Trucks and buses	24	7		%
Recreational vehicles	0	0		%
Terrain type:	Level	Level	Level	
Grade	%	%	%	
Length	mi	mi	mi	
Trucks and buses PCE, ET	1.5	1.5		
Recreational vehicle PCE, ER	1.2	1.2		
Heavy vehicle adjustment, fHV	0.893	0.966		
Driver population factor, fP	1.00	1.00		
Flow rate, vp	4535	328		pcph

```
_____________________________Estimation of V12 Merge Areas_____________________________

                  L  =    0.00    (Equation 25-2 or 25-3)
                   EQ
                  P  =    1.000   Using Equation  0
                   FM
                  v  = v  (P  ) =  4535   pc/h
                   12   F   FM

___________________________________Capacity Checks___________________________________

                           Actual        Maximum         LOS F?
     v                     4863          4500            Yes
      FO
     v                     4863          4600            Yes
      R12

__________________Level of Service Determination (if not F)____________________

Density, D = 5.475 + 0.00734 v  + 0.0078 v   - 0.00627 L   =   40.1
pc/mi/ln
          R                   R           12            A
Level of service for ramp-freeway junction areas of influence  F

_____________________________________Speed Estimation_____________________________________

Intermediate speed variable,                M  = 0.791
                                             S
Space mean speed in ramp influence area,    S  = 44.7    mph
                                             R
Space mean speed in outer lanes,            S  =  N/A    mph
                                             0
Space mean speed for all vehicles,          S  = 44.7    mph
_____________________________________________________________________________________
```

HCS2000: Ramps and Ramp Junctions Release 4.1

Merge Analysis

Analyst:	Fischbach
Agency/Co.:	Fischbach
Date performed:	June 2001
Analysis time period:	PM Peak Hour
Freeway/dir or travel:	SB 55
Junction:	N. on-ramp fr. Mallory
Jurisdiction:	Memphis, TN
Analysis Year:	2025 DHVs
Description:	10019

Freeway Data

Type of analysis	49.1	
Number of lanes in freeway	2	
Free-flow speed on freeway	55.0	mph
Volume on freeway	5386	vph

On Ramp Data

Side of freeway	Right	
Number of lanes in ramp	1	
Free-flow speed on ramp	35.0	mph
Volume on ramp	253	vph
Length of first accel/decel lane	500	ft
Length of second accel/decel lane		ft

Adjacent Ramp Data (if one exists)

Does adjacent ramp exist?	No	
Volume on adjacent Ramp		vph
Position of adjacent Ramp		
Type of adjacent Ramp		
Distance to adjacent Ramp		ft

Conversion to pc/h Under Base Conditions

Junction Components	Freeway	Ramp	Adjacent Ramp	
Volume, V (vph)	5386	253		vph
Peak-hour factor, PHF	0.90	0.90		
Peak 15-min volume, v15	1496	70		v
Trucks and buses	24	7		%
Recreational vehicles	0	0		%
Terrain type:	Level	Level	Level	
Grade	%	%	%	
Length	mi	mi	mi	
Trucks and buses PCE, ET	1.5	1.5		
Recreational vehicle PCE, ER	1.2	1.2		
Heavy vehicle adjustment, fHV	0.893	0.966		
Driver population factor, fP	1.00	1.00		
Flow rate, vp	6703	291		pcph

```
_____________________Estimation of V12 Merge Areas_____________________

                  L  =    0.00    (Equation 25-2 or 25-3)
                   EQ
                  P  =    1.000   Using Equation  0
                   FM
                  v  = v  (P  ) =  6703   pc/h
                   12   F   FM

_____________________________Capacity Checks_____________________________

                           Actual        Maximum         LOS F?
     v                     6994          4500            Yes
      FO
     v                     6994          4600            Yes
      R12

_________________Level of Service Determination (if not F)_________________

Density, D = 5.475 + 0.00734 v  + 0.0078 v   - 0.00627 L   =   56.8
pc/mi/ln
          R                   R           12            A
Level of service for ramp-freeway junction areas of influence  F

_____________________________Speed Estimation_____________________________

Intermediate speed variable,                M  = 4.537
                                             S
Space mean speed in ramp influence area,    S  =         mph
                                             R
Space mean speed in outer lanes,            S  =  N/A    mph
                                             0
Space mean speed for all vehicles,          S  =         mph
_____________________________________________________________________________
```

HCS2000: Ramps and Ramp Junctions Release 4.1

Diverge Analysis

Analyst:	Fischbach
Agency/Co.:	Fischbach
Date performed:	June 2001
Analysis time period:	AM Peak Hour
Freeway/dir or travel:	EB I-55
Junction:	Off-ramp to Florida
Jurisdiction:	Memphis, TN
Analysis Year:	2025 DHVs
Description:	10019

Freeway Data

Type of analysis	Diverge	
Number of lanes in freeway	3	
Free-flow speed on freeway	55.0	mph
Volume on freeway	4475	vph

Off Ramp Data

Side of freeway	Right	
Number of lanes in ramp	1	
Free-Flow speed on ramp	35.0	mph
Volume on ramp	324	vph
Length of first accel/decel lane	275	ft
Length of second accel/decel lane		ft

Adjacent Ramp Data (if one exists)

Does adjacent ramp exist?	No	
Volume on adjacent ramp		vph
Position of adjacent ramp		
Type of adjacent ramp		
Distance to adjacent ramp		ft

Conversion to pc/h Under Base Conditions

Junction Components	Freeway	Ramp	Adjacent Ramp	
Volume, V (vph)	4475	324		vph
Peak-hour factor, PHF	0.90	0.90		
Peak 15-min volume, v15	1243	90		v
Trucks and buses	23	3		%
Recreational vehicles	0	0		%
Terrain type:	Level	Level	Level	
Grade	0.00 %	0.00 %	%	
Length	0.00 mi	0.00 mi	mi	
Trucks and buses PCE, ET	1.5	1.5		
Recreational vehicle PCE, ER	1.2	1.2		
Heavy vehicle adjustment, fHV	0.897	0.985		
Driver population factor, fP	1.00	1.00		
Flow rate, vp	5544	365		pcph

Estimation of V12 Diverge Areas

L_{EQ} = 0.00 (Equation 25-8 or 25-9)

P_{FD} = 0.605 Using Equation 5

$v_{12} = v_R + (v_F - v_R) P_{FD}$ = 3496 pc/h

Capacity Checks

	Actual	Maximum	LOS F?
$v_{Fi} = v_F$	5544	6750	No
v_{12}	3496	4400	No
$v_{FO} = v_F - v_R$	5179	6750	No
v_R	365	2000	No

Level of Service Determination (if not F)

Density, $D_R = 4.252 + 0.0086\, v_{12} - 0.009\, L_D$ = 31.8 pc/mi/ln

Level of service for ramp-freeway junction areas of influence D

Speed Estimation

Intermediate speed variable, D_S = 0.461

Space mean speed in ramp influence area, S_R = 49 mph

Space mean speed in outer lanes, S_O = 56.2 mph

Space mean speed for all vehicles, S = 51.5 mph

HCS2000: Ramps and Ramp Junctions Release 4.1

Diverge Analysis

Analyst:	Fischbach
Agency/Co.:	Fischbach
Date performed:	June 2001
Analysis time period:	PM Peak Hour
Freeway/dir or travel:	EB I-55
Junction:	Off-ramp to Florida
Jurisdiction:	Memphis, TN
Analysis Year:	2025 DHVs
Description:	10019

Freeway Data

Type of analysis	Diverge	
Number of lanes in freeway	3	
Free-flow speed on freeway	55.0	mph
Volume on freeway	6559	vph

Off Ramp Data

Side of freeway	Right	
Number of lanes in ramp	1	
Free-Flow speed on ramp	35.0	mph
Volume on ramp	792	vph
Length of first accel/decel lane	275	ft
Length of second accel/decel lane		ft

Adjacent Ramp Data (if one exists)

Does adjacent ramp exist?	No	
Volume on adjacent ramp		vph
Position of adjacent ramp		
Type of adjacent ramp		
Distance to adjacent ramp		ft

Conversion to pc/h Under Base Conditions

Junction Components	Freeway		Ramp		Adjacent Ramp		
Volume, V (vph)	6559		792				vph
Peak-hour factor, PHF	0.90		0.90				
Peak 15-min volume, v15	1822		220				v
Trucks and buses	23		3				%
Recreational vehicles	0		0				%
Terrain type:	Level		Level		Level		
Grade	0.00	%	0.00	%		%	
Length	0.00	mi	0.00	mi		mi	
Trucks and buses PCE, ET	1.5		1.5				
Recreational vehicle PCE, ER	1.2		1.2				
Heavy vehicle adjustment, fHV	0.897		0.985				
Driver population factor, fP	1.00		1.00				
Flow rate, vp	8126		893				pcph

Estimation of V12 Diverge Areas

L_{EQ} = 0.00 (Equation 25-8 or 25-9)

P_{FD} = 0.516 Using Equation 5

$v_{12} = v_R + (v_F - v_R) P_{FD}$ = 4624 pc/h

Capacity Checks

	Actual	Maximum	LOS F?
$v_{Fi} = v_F$	8126	6750	Yes
v_{12}	4624	4400	Yes
$v_{FO} = v_F - v_R$	7233	6750	No
v_R	893	2000	No

Level of Service Determination (if not F)

Density, $D = 4.252 + 0.0086 v_R - 0.009 L_D$ = 41.5 pc/mi/ln

Level of service for ramp-freeway junction areas of influence F

Speed Estimation

Intermediate speed variable, D_S = 0.508

Space mean speed in ramp influence area, S_R = 48 mph

Space mean speed in outer lanes, S_O = 50.6 mph

Space mean speed for all vehicles, S = 49.3 mph

HCS2000: Ramps and Ramp Junctions Release 4.1

Merge Analysis

Analyst:	Fischbach
Agency/Co.:	Fischbach
Date performed:	June 2001
Analysis time period:	AM Peak Hour
Freeway/dir or travel:	WB I-55
Junction:	On-ramp from Florida
Jurisdiction:	Memphis, TN
Analysis Year:	2025 DHVs
Description:	10019

Freeway Data

Type of analysis	50.2	
Number of lanes in freeway	3	
Free-flow speed on freeway	55.0	mph
Volume on freeway	5710	vph

On Ramp Data

Side of freeway	Right	
Number of lanes in ramp	1	
Free-flow speed on ramp	35.0	mph
Volume on ramp	722	vph
Length of first accel/decel lane	350	ft
Length of second accel/decel lane		ft

Adjacent Ramp Data (if one exists)

Does adjacent ramp exist?	No	
Volume on adjacent Ramp		vph
Position of adjacent Ramp		
Type of adjacent Ramp		
Distance to adjacent Ramp		ft

Conversion to pc/h Under Base Conditions

Junction Components	Freeway	Ramp	Adjacent Ramp	
Volume, V (vph)	5710	722		vph
Peak-hour factor, PHF	0.90	0.90		
Peak 15-min volume, v15	1586	201		v
Trucks and buses	23	3		%
Recreational vehicles	0	0		%
Terrain type:	Level	Level	Level	
Grade	%	%	%	
Length	mi	mi	mi	
Trucks and buses PCE, ET	1.5	1.5		
Recreational vehicle PCE, ER	1.2	1.2		
Heavy vehicle adjustment, fHV	0.897	0.985		
Driver population factor, fP	1.00	1.00		
Flow rate, vp	7074	814		pcph

```
_____________________________Estimation of V12 Merge Areas_____________________________

                  L  =    0.00    (Equation 25-2 or 25-3)
                   EQ
                  P  =    0.587   Using Equation  1
                   FM
                  v  = v  (P  ) =  4155   pc/h
                   12   F   FM

___________________________________Capacity Checks___________________________________

                           Actual        Maximum         LOS F?
     v                     7888          6750            Yes
      FO
     v                     4969          4600            Yes
      R12

__________________Level of Service Determination (if not F)____________________

Density, D = 5.475 + 0.00734 v  + 0.0078 v   - 0.00627 L   =   41.7
pc/mi/ln
          R                   R           12            A
Level of service for ramp-freeway junction areas of influence  F

_____________________________________Speed Estimation_____________________________________

Intermediate speed variable,                M  = 0.858
                                             S
Space mean speed in ramp influence area,    S  = 43.9    mph
                                             R
Space mean speed in outer lanes,            S  = 44.8    mph
                                             0
Space mean speed for all vehicles,          S  = 44.2    mph
_____________________________________________________________________________________
```

HCS2000: Ramps and Ramp Junctions Release 4.1

Merge Analysis

Analyst:	Fischbach
Agency/Co.:	Fischbach
Date performed:	June 2001
Analysis time period:	PM Peak Hour
Freeway/dir or travel:	WB I-55
Junction:	On-ramp from Florida
Jurisdiction:	Memphis, TN
Analysis Year:	2025 DHVs
Description:	10019

Freeway Data

Type of analysis	51.6	
Number of lanes in freeway	3	
Free-flow speed on freeway	55.0	mph
Volume on freeway	4146	vph

On Ramp Data

Side of freeway	Right	
Number of lanes in ramp	1	
Free-flow speed on ramp	35.0	mph
Volume on ramp	340	vph
Length of first accel/decel lane	350	ft
Length of second accel/decel lane		ft

Adjacent Ramp Data (if one exists)

Does adjacent ramp exist?	No	
Volume on adjacent Ramp		vph
Position of adjacent Ramp		
Type of adjacent Ramp		
Distance to adjacent Ramp		ft

Conversion to pc/h Under Base Conditions

Junction Components	Freeway	Ramp	Adjacent Ramp	
Volume, V (vph)	4146	340		vph
Peak-hour factor, PHF	0.90	0.90		
Peak 15-min volume, v15	1152	94		v
Trucks and buses	23	3		%
Recreational vehicles	0	0		%
Terrain type:	Level	Level	Level	
Grade	%	%	%	
Length	mi	mi	mi	
Trucks and buses PCE, ET	1.5	1.5		
Recreational vehicle PCE, ER	1.2	1.2		
Heavy vehicle adjustment, fHV	0.897	0.985		
Driver population factor, fP	1.00	1.00		
Flow rate, vp	5136	383		pcph

```
_____________________________Estimation of V12 Merge Areas_____________________________

                  L  =    0.00    (Equation 25-2 or 25-3)
                   EQ
                  P  =    0.587   Using Equation  1
                   FM
                  v  = v  (P  ) =  3016   pc/h
                   12   F   FM

___________________________________Capacity Checks___________________________________

                           Actual        Maximum         LOS F?
     v                     5519          6750            No
      FO
     v                     3399          4600            No
      R12

_________________Level of Service Determination (if not F)_____________________

Density, D = 5.475 + 0.00734 v  + 0.0078 v   - 0.00627 L   =   29.6
pc/mi/ln
          R                   R           12            A
Level of service for ramp-freeway junction areas of influence  D

_____________________________________Speed Estimation_____________________________________

Intermediate speed variable,                M  = 0.413
                                             S
Space mean speed in ramp influence area,    S  = 49.6    mph
                                             R
Space mean speed in outer lanes,            S  = 49.2    mph
                                             0
Space mean speed for all vehicles,          S  = 49.5    mph
_____________________________________________________________________________________
```

APPENDIX D

CAPACITY ANALYSIS: PROPOSED MODIFICATIONS

RAMP JUNCTIONS

HCS2000: Ramps and Ramp Junctions Release 4.1

Diverge Analysis

Analyst:	Fischbach
Agency/Co.:	Fischbach
Date performed:	June 2001
Analysis time period:	AM Peak Hour
Freeway/dir or travel:	Northbound I-55
Junction:	Northbound off-ramp to Mallory
Jurisdiction:	Memphis, TN
Analysis Year:	2005 DHVs
Description:	10019 PROPOSED

Freeway Data

Type of analysis	Diverge	
Number of lanes in freeway	3	
Free-flow speed on freeway	55.0	mph
Volume on freeway	4289	vph

Off Ramp Data

Side of freeway	Right	
Number of lanes in ramp	1	
Free-Flow speed on ramp	35.0	mph
Volume on ramp	532	vph
Length of first accel/decel lane	200	ft
Length of second accel/decel lane		ft

Adjacent Ramp Data (if one exists)

Does adjacent ramp exist?	Yes	
Volume on adjacent ramp	183	vph
Position of adjacent ramp	Downstream	
Type of adjacent ramp	On	
Distance to adjacent ramp	1800	ft

Conversion to pc/h Under Base Conditions

Junction Components	Freeway		Ramp		Adjacent Ramp		
Volume, V (vph)	4289		532		183		vph
Peak-hour factor, PHF	0.90		0.90		0.90		
Peak 15-min volume, v15	1191		148		51		v
Trucks and buses	24		7		7		%
Recreational vehicles	0		0		0		%
Terrain type:	Level		Level		Level		
Grade	0.00	%	0.00	%	0.00	%	
Length	0.00	mi	0.00	mi	0.00	mi	
Trucks and buses PCE, ET	1.5		1.5		1.5		
Recreational vehicle PCE, ER	1.2		1.2		1.2		
Heavy vehicle adjustment, fHV	0.893		0.966		0.966		
Driver population factor, fP	1.00		1.00		1.00		
Flow rate, vp	5337		612		210		pcph

Estimation of V12 Diverge Areas

L_{EQ} = 0.00 (Equation 25-8 or 25-9)

P_{FD} = 0.598 Using Equation 5

$v_{12} = v_R + (v_F - v_R) P_{FD}$ = 3440 pc/h

Capacity Checks

	Actual	Maximum	LOS F?
$v_{Fi} = v_F$	5337	6750	No
v_{12}	3440	4400	No
$v_{FO} = v_F - v_R$	4725	6750	No
v_R	612	2000	No

Level of Service Determination (if not F)

Density, $D = 4.252 + 0.0086 v_R - 0.009 L_D$ = 32.0 pc/mi/ln

Level of service for ramp-freeway junction areas of influence D

Speed Estimation

Intermediate speed variable, D_S = 0.483

Space mean speed in ramp influence area, S_R = 49 mph

Space mean speed in outer lanes, S_O = 56.8 mph

Space mean speed for all vehicles, S = 51.3 mph

HCS2000: Ramps and Ramp Junctions Release 4.1

Diverge Analysis

Analyst:	Fischbach
Agency/Co.:	Fischbach
Date performed:	June 2001
Analysis time period:	PM Peak Hour
Freeway/dir or travel:	Northbound I-55
Junction:	Northbound off-ramp to Mallory
Jurisdiction:	Memphis, TN
Analysis Year:	2005 DHVs
Description:	10019 PROPOSED

Freeway Data

Type of analysis	Diverge	
Number of lanes in freeway	3	
Free-flow speed on freeway	55.0	mph
Volume on freeway	3185	vph

Off Ramp Data

Side of freeway	Right	
Number of lanes in ramp	1	
Free-Flow speed on ramp	35.0	mph
Volume on ramp	276	vph
Length of first accel/decel lane	200	ft
Length of second accel/decel lane		ft

Adjacent Ramp Data (if one exists)

Does adjacent ramp exist?	Yes	
Volume on adjacent ramp	269	vph
Position of adjacent ramp	Downstream	
Type of adjacent ramp	On	
Distance to adjacent ramp	1800	ft

Conversion to pc/h Under Base Conditions

Junction Components	Freeway		Ramp		Adjacent Ramp		
Volume, V (vph)	3185		276		269		vph
Peak-hour factor, PHF	0.90		0.90		0.90		
Peak 15-min volume, v15	885		77		75		v
Trucks and buses	24		7		7		%
Recreational vehicles	0		0		0		%
Terrain type:	Level		Level		Level		
Grade	0.00	%	0.00	%	0.00	%	
Length	0.00	mi	0.00	mi	0.00	mi	
Trucks and buses PCE, ET	1.5		1.5		1.5		
Recreational vehicle PCE, ER	1.2		1.2		1.2		
Heavy vehicle adjustment, fHV	0.893		0.966		0.966		
Driver population factor, fP	1.00		1.00		1.00		
Flow rate, vp	3964		317		309		pcph

Estimation of V12 Diverge Areas

L_{EQ} = 0.00 (Equation 25-8 or 25-9)

P_{FD} = 0.646 Using Equation 5

$v_{12} = v_R + (v_F - v_R) P_{FD}$ = 2674 pc/h

Capacity Checks

	Actual	Maximum	LOS F?
$v_{Fi} = v_F$	3964	6750	No
v_{12}	2674	4400	No
$v_{FO} = v_F - v_R$	3647	6750	No
v_R	317	2000	No

Level of Service Determination (if not F)

Density, $D = 4.252 + 0.0086 v_R - 0.009 L_D$ = 25.4 pc/mi/ln

Level of service for ramp-freeway junction areas of influence C

Speed Estimation

Intermediate speed variable, D_S = 0.457

Space mean speed in ramp influence area, S_R = 49 mph

Space mean speed in outer lanes, S_O = 59.2 mph

Space mean speed for all vehicles, S = 52.0 mph

HCS2000: Ramps and Ramp Junctions Release 4.1

Merge Analysis

Analyst:	Fischbach
Agency/Co.:	Fischbach
Date performed:	June 2001
Analysis time period:	AM Peak Hour
Freeway/dir or travel:	Northbound I-55
Junction:	on-ramp from Mallory
Jurisdiction:	Memphis, TN
Analysis Year:	2005 DHVs
Description:	10019 PROPOSED

Freeway Data

Type of analysis	52.0	
Number of lanes in freeway	3	
Free-flow speed on freeway	55.0	mph
Volume on freeway	3757	vph

On Ramp Data

Side of freeway	Right	
Number of lanes in ramp	1	
Free-flow speed on ramp	35.0	mph
Volume on ramp	183	vph
Length of first accel/decel lane	400	ft
Length of second accel/decel lane		ft

Adjacent Ramp Data (if one exists)

Does adjacent ramp exist?	Yes	
Volume on adjacent Ramp	532	vph
Position of adjacent Ramp	Upstream	
Type of adjacent Ramp	Off	
Distance to adjacent Ramp	1800	ft

Conversion to pc/h Under Base Conditions

Junction Components	Freeway	Ramp	Adjacent Ramp	
Volume, V (vph)	3757	183	532	vph
Peak-hour factor, PHF	0.90	0.90	0.90	
Peak 15-min volume, v15	1044	51	148	v
Trucks and buses	24	7	7	%
Recreational vehicles	0	0	0	%
Terrain type:	Level	Level	Level	
Grade	%	%	%	
Length	mi	mi	mi	
Trucks and buses PCE, ET	1.5	1.5	1.5	
Recreational vehicle PCE, ER	1.2	1.2	1.2	
Heavy vehicle adjustment, fHV	0.893	0.966	0.966	
Driver population factor, fP	1.00	1.00	1.00	
Flow rate, vp	4675	210	612	pcph

Estimation of V12 Merge Areas

L_{EQ} = (Equation 25-2 or 25-3)

P_{FM} = 0.589 Using Equation 1

$v_{12} = v_F (P_{FM})$ = 2752 pc/h

Capacity Checks

	Actual	Maximum	LOS F?
v_{FO}	4885	6750	No
v_{R12}	2962	4600	No

Level of Service Determination (if not F)

Density, $D = 5.475 + 0.00734 v_R + 0.0078 v_R - 0.00627 L_{12}$ = 26.0 pc/mi/ln

Level of service for ramp-freeway junction areas of influence A

Speed Estimation

Intermediate speed variable, M_S = 0.368

Space mean speed in ramp influence area, S_R = 50.2 mph

Space mean speed in outer lanes, S_O = 49.9 mph

Space mean speed for all vehicles, S = 50.1 mph

HCS2000: Ramps and Ramp Junctions Release 4.1

Merge Analysis

Analyst:	Fischbach
Agency/Co.:	Fischbach
Date performed:	June 2001
Analysis time period:	PM Peak Hour
Freeway/dir or travel:	Northbound I-55
Junction:	on-ramp from Mallory
Jurisdiction:	Memphis, TN
Analysis Year:	2005 DHVs
Description:	10019 PROPOSED

Freeway Data

Type of analysis	52.5	
Number of lanes in freeway	3	
Free-flow speed on freeway	55.0	mph
Volume on freeway	2909	vph

On Ramp Data

Side of freeway	Right	
Number of lanes in ramp	1	
Free-flow speed on ramp	35.0	mph
Volume on ramp	269	vph
Length of first accel/decel lane	400	ft
Length of second accel/decel lane		ft

Adjacent Ramp Data (if one exists)

Does adjacent ramp exist?	Yes	
Volume on adjacent Ramp	276	vph
Position of adjacent Ramp	Upstream	
Type of adjacent Ramp	Off	
Distance to adjacent Ramp	1800	ft

Conversion to pc/h Under Base Conditions

Junction Components	Freeway	Ramp	Adjacent Ramp	
Volume, V (vph)	2909	269	276	vph
Peak-hour factor, PHF	0.90	0.90	0.90	
Peak 15-min volume, v15	808	75	77	v
Trucks and buses	24	7	7	%
Recreational vehicles	0	0	0	%
Terrain type:	Level	Level	Level	
Grade	%	%	%	
Length	mi	mi	mi	
Trucks and buses PCE, ET	1.5	1.5	1.5	
Recreational vehicle PCE, ER	1.2	1.2	1.2	
Heavy vehicle adjustment, fHV	0.893	0.966	0.966	
Driver population factor, fP	1.00	1.00	1.00	
Flow rate, vp	3620	309	317	pcph

Estimation of V12 Merge Areas

L_{EQ} = (Equation 25-2 or 25-3)

P_{FM} = 0.589 Using Equation 1

$v_{12} = v_F (P_{FM})$ = 2131 pc/h

Capacity Checks

	Actual	Maximum	LOS F?
v_{FO}	3929	6750	No
v_{R12}	2440	4600	No

Level of Service Determination (if not F)

Density, $D = 5.475 + 0.00734 v_R + 0.0078 v_{12} - 0.00627 L_A$ = 21.9 pc/mi/ln

Level of service for ramp-freeway junction areas of influence C

Speed Estimation

Intermediate speed variable, M_S = 0.338

Space mean speed in ramp influence area, S_R = 50.6 mph

Space mean speed in outer lanes, S_O = 51.4 mph

Space mean speed for all vehicles, S = 50.9 mph

HCS2000: Ramps and Ramp Junctions Release 4.1

Diverge Analysis

Analyst:	Fischbach
Agency/Co.:	Fischbach
Date performed:	June 2001
Analysis time period:	AM Peak Hour
Freeway/dir or travel:	Southbound I-55
Junction:	Off-ramp to Mallory
Jurisdiction:	Memphis, TN
Analysis Year:	2005 DHVs
Description:	10019 PROPOSED

Freeway Data

Type of analysis	Diverge	
Number of lanes in freeway	3	
Free-flow speed on freeway	55.0	mph
Volume on freeway	3121	vph

Off Ramp Data

Side of freeway	Right	
Number of lanes in ramp	1	
Free-Flow speed on ramp	35.0	mph
Volume on ramp	301	vph
Length of first accel/decel lane	500	ft
Length of second accel/decel lane		ft

Adjacent Ramp Data (if one exists)

Does adjacent ramp exist?	Yes	
Volume on adjacent ramp	378	vph
Position of adjacent ramp	Downstream	
Type of adjacent ramp	On	
Distance to adjacent ramp	1800	ft

Conversion to pc/h Under Base Conditions

Junction Components	Freeway	Ramp	Adjacent Ramp	
Volume, V (vph)	3121	301	378	vph
Peak-hour factor, PHF	0.90	0.90	0.90	
Peak 15-min volume, v15	867	84	105	v
Trucks and buses	24	7	7	%
Recreational vehicles	0	0	0	%
Terrain type:	Level	Level	Level	
Grade	0.00 %	0.00 %	0.00 %	
Length	0.00 mi	0.00 mi	0.00 mi	
Trucks and buses PCE, ET	1.5	1.5	1.5	
Recreational vehicle PCE, ER	1.2	1.2	1.2	
Heavy vehicle adjustment, fHV	0.893	0.966	0.966	
Driver population factor, fP	1.00	1.00	1.00	
Flow rate, vp	3884	346	435	pcph

Estimation of V12 Diverge Areas

L_{EQ} = 0.00 (Equation 25-8 or 25-9)

P_{FD} = 0.647 Using Equation 5

$v_{12} = v_R + (v_F - v_R) P_{FD}$ = 2635 pc/h

Capacity Checks

	Actual	Maximum	LOS F?
$v_{Fi} = v_F$	3884	6750	No
v_{12}	2635	4400	No
$v_{FO} = v_F - v_R$	3538	6750	No
v_R	346	2000	No

Level of Service Determination (if not F)

Density, $D = 4.252 + 0.0086 v_R - 0.009 L_D$ = 22.4 pc/mi/ln

Level of service for ramp-freeway junction areas of influence C

Speed Estimation

Intermediate speed variable, D_S = 0.459

Space mean speed in ramp influence area, S_R = 49 mph

Space mean speed in outer lanes, S_O = 59.4 mph

Space mean speed for all vehicles, S = 51.9 mph

HCS2000: Ramps and Ramp Junctions Release 4.1

Diverge Analysis

Analyst:	Fischbach
Agency/Co.:	Fischbach
Date performed:	June 2001
Analysis time period:	PM Peak Hour
Freeway/dir or travel:	Southbound I-55
Junction:	Off-ramp to Mallory
Jurisdiction:	Memphis, TN
Analysis Year:	2005 DHVs
Description:	10019 PROPOSED

Freeway Data

Type of analysis	Diverge	
Number of lanes in freeway	3	
Free-flow speed on freeway	55.0	mph
Volume on freeway	4031	vph

Off Ramp Data

Side of freeway	Right	
Number of lanes in ramp	1	
Free-Flow speed on ramp	35.0	mph
Volume on ramp	155	vph
Length of first accel/decel lane	500	ft
Length of second accel/decel lane		ft

Adjacent Ramp Data (if one exists)

Does adjacent ramp exist?	Yes	
Volume on adjacent ramp	596	vph
Position of adjacent ramp	Downstream	
Type of adjacent ramp	On	
Distance to adjacent ramp	1800	ft

Conversion to pc/h Under Base Conditions

Junction Components	Freeway	Ramp	Adjacent Ramp	
Volume, V (vph)	4031	155	596	vph
Peak-hour factor, PHF	0.90	0.90	0.90	
Peak 15-min volume, v15	1120	43	166	v
Trucks and buses	24	7	7	%
Recreational vehicles	0	0	0	%
Terrain type:	Level	Level	Level	
Grade	0.00 %	0.00 %	0.00 %	
Length	0.00 mi	0.00 mi	0.00 mi	
Trucks and buses PCE, ET	1.5	1.5	1.5	
Recreational vehicle PCE, ER	1.2	1.2	1.2	
Heavy vehicle adjustment, fHV	0.893	0.966	0.966	
Driver population factor, fP	1.00	1.00	1.00	
Flow rate, vp	5016	178	685	pcph

Estimation of V12 Diverge Areas

L_{EQ} = 0.00 (Equation 25-8 or 25-9)

P_{FD} = 0.626 Using Equation 5

$v_{12} = v_R + (v_F - v_R) P_{FD}$ = 3209 pc/h

Capacity Checks

	Actual	Maximum	LOS F?
$v_{Fi} = v_F$	5016	6750	No
v_{12}	3209	4400	No
$v_{FO} = v_F - v_R$	4838	6750	No
v_R	178	2000	No

Level of Service Determination (if not F)

Density, $D = 4.252 + 0.0086\, v_R - 0.009\, L_D$ = 27.3 pc/mi/ln

Level of service for ramp-freeway junction areas of influence C

Speed Estimation

Intermediate speed variable, D_S = 0.444

Space mean speed in ramp influence area, S_R = 49 mph

Space mean speed in outer lanes, S_O = 57.2 mph

Space mean speed for all vehicles, S = 51.8 mph

HCS2000: Ramps and Ramp Junctions Release 4.1

Merge Analysis

Analyst:	Fischbach
Agency/Co.:	Fischbach
Date performed:	June 2001
Analysis time period:	AM Peak Hour
Freeway/dir or travel:	Southbound I-55
Junction:	On-ramp from Mallory
Jurisdiction:	Memphis, TN
Analysis Year:	2005 DHVs
Description:	10019 PROPOSED

Freeway Data

Type of analysis	52.5	
Number of lanes in freeway	3	
Free-flow speed on freeway	55.0	mph
Volume on freeway	2820	vph

On Ramp Data

Side of freeway	Right	
Number of lanes in ramp	1	
Free-flow speed on ramp	35.0	mph
Volume on ramp	378	vph
Length of first accel/decel lane	500	ft
Length of second accel/decel lane		ft

Adjacent Ramp Data (if one exists)

Does adjacent ramp exist?	Yes	
Volume on adjacent Ramp	301	vph
Position of adjacent Ramp	Upstream	
Type of adjacent Ramp	Off	
Distance to adjacent Ramp	1800	ft

Conversion to pc/h Under Base Conditions

Junction Components	Freeway	Ramp	Adjacent Ramp	
Volume, V (vph)	2820	378	301	vph
Peak-hour factor, PHF	0.90	0.90	0.90	
Peak 15-min volume, v15	783	105	84	v
Trucks and buses	24	7	0	%
Recreational vehicles	0	0	0	%
Terrain type:	Level	Level	Level	
Grade	%	%	%	
Length	mi	mi	mi	
Trucks and buses PCE, ET	1.5	1.5	1.5	
Recreational vehicle PCE, ER	1.2	1.2	1.2	
Heavy vehicle adjustment, fHV	0.893	0.966	1.000	
Driver population factor, fP	1.00	1.00	1.00	
Flow rate, vp	3509	435	334	pcph

Estimation of V12 Merge Areas

L_{EQ} = (Equation 25-2 or 25-3)

P_{FM} = 0.591 Using Equation 1

$v_{12} = v_F (P_{FM})$ = 2076 pc/h

Capacity Checks

	Actual	Maximum	LOS F?
v_{FO}	3944	6750	No
v_{R12}	2511	4600	No

Level of Service Determination (if not F)

Density, $D = 5.475 + 0.00734 v_R + 0.0078 v_{R12} - 0.00627 L_A$ = 21.7 pc/mi/ln

Level of service for ramp-freeway junction areas of influence C

Speed Estimation

Intermediate speed variable, M_S = 0.334

Space mean speed in ramp influence area, S_R = 50.7 mph

Space mean speed in outer lanes, S_O = 51.6 mph

Space mean speed for all vehicles, S = 51.0 mph

HCS2000: Ramps and Ramp Junctions Release 4.1

Merge Analysis

Analyst:	Fischbach
Agency/Co.:	Fischbach
Date performed:	June 2001
Analysis time period:	PM Peak Hour
Freeway/dir or travel:	Southbound I-55
Junction:	On-ramp from Mallory
Jurisdiction:	Memphis, TN
Analysis Year:	2005 DHVs
Description:	10019 PROPOSED

Freeway Data

Type of analysis	51.6	
Number of lanes in freeway	3	
Free-flow speed on freeway	55.0	mph
Volume on freeway	3876	vph

On Ramp Data

Side of freeway	Right	
Number of lanes in ramp	1	
Free-flow speed on ramp	35.0	mph
Volume on ramp	596	vph
Length of first accel/decel lane	500	ft
Length of second accel/decel lane		ft

Adjacent Ramp Data (if one exists)

Does adjacent ramp exist?	Yes	
Volume on adjacent Ramp	155	vph
Position of adjacent Ramp	Upstream	
Type of adjacent Ramp	Off	
Distance to adjacent Ramp	1800	ft

Conversion to pc/h Under Base Conditions

Junction Components	Freeway	Ramp	Adjacent Ramp	
Volume, V (vph)	3876	596	155	vph
Peak-hour factor, PHF	0.90	0.90	0.90	
Peak 15-min volume, v15	1077	166	43	v
Trucks and buses	24	7	7	%
Recreational vehicles	0	0	0	%
Terrain type:	Level	Level	Level	
Grade	%	%	%	
Length	mi	mi	mi	
Trucks and buses PCE, ET	1.5	1.5	1.5	
Recreational vehicle PCE, ER	1.2	1.2	1.2	
Heavy vehicle adjustment, fHV	0.893	0.966	0.966	
Driver population factor, fP	1.00	1.00	1.00	
Flow rate, vp	4823	685	178	pcph

Estimation of V12 Merge Areas

L_{EQ} = (Equation 25-2 or 25-3)

P_{FM} = 0.591 Using Equation 1

$v_{12} = v_F (P_{FM})$ = 2853 pc/h

Capacity Checks

	Actual	Maximum	LOS F?
v_{FO}	5508	6750	No
v_{R12}	3538	4600	No

Level of Service Determination (if not F)

Density, $D = 5.475 + 0.00734 v_R + 0.0078 v_{12} - 0.00627 L_A$ = 29.6 pc/mi/ln

Level of service for ramp-freeway junction areas of influence D

Speed Estimation

Intermediate speed variable, M_S = 0.420

Space mean speed in ramp influence area, S_R = 49.5 mph

Space mean speed in outer lanes, S_O = 49.7 mph

Space mean speed for all vehicles, S = 49.6 mph

SURFACE STREET INTERSECTIONS

INPUT WORKSHEET

General Information		Site Information	
Analyst	*TMC*	Intersection	
Agency or Co.	*TH0MAS & MILLER,LLC*	Area Type	*CBD or Similar*
Date Performed	*11/29/2001*	Jurisdiction	
Time Period	*AM PEAK*	Analysis Year	*2005*

Intersection Geometry

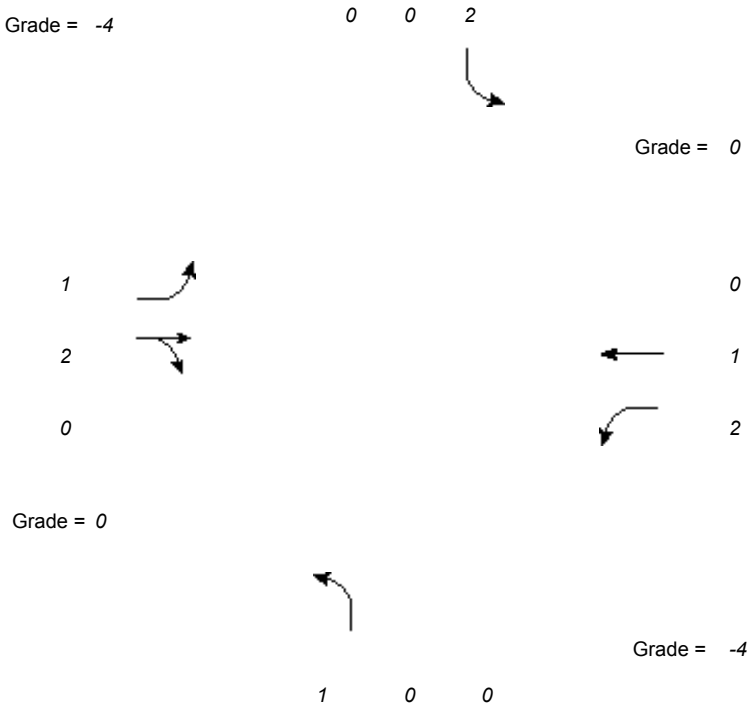

Volume and Timing Input

	EB			WB			NB			SB		
	LT	TH	RT	LT	TH	RT	LT	TH	RT	LT	TH	RT
Volume (vph)	*13*	*89*	*307*	*71*	*154*		*95*			*231*		
% Heavy veh	*5*	*5*	*5*	*5*	*5*		*5*			*5*		
PHF	*0.90*	*0.90*	*0.90*	*0.90*	*0.90*		*0.90*			*0.90*		
Actuated (P/A)	*P*	*P*	*P*	*P*	*P*	*P*	*P*			*P*		
Startup lost time	*2.0*	*2.0*		*2.0*	*2.0*		*2.0*			*2.0*		
Ext. eff. green	*2.0*	*2.0*		*2.0*	*2.0*		*2.0*			*2.0*		
Arrival type	*3*	*3*		*3*	*3*		*3*			*3*		
Ped volume	*0*			*0*			*0*			*0*		
Bicycle volume												
Parking (Y or N)	*N*		*N*	*N*		*N*	*N*		*N*	*N*		*N*
Parking/hr												
Bus stops/hr	*0*	*0*		*0*	*0*		*0*			*0*		
Ped timing	*0.0*			*0.0*			*3.0*			*0.0*		

	Excl. Left	Thru & RT	03	04	Excl. Left	06	07	08
Timing	G = *10.0*	G = *30.0*	G =	G =	G = *15.0*	G =	G =	G =
	Y =	Y =	Y =	Y =	Y =	Y =	Y =	Y =
Duration of Analysis (hrs) = *0.25*						Cycle Length C = *70.0*		

CAPACITY AND LOS WORKSHEET

General Information

Project Description *I-55 & MALLORY AVE PROPOSED SPUI*

Capacity Analysis

	EB			WB			NB			SB		
Lane group	*L*	*TR*		*L*	*T*		*L*			*L*		
Adj. flow rate	*14*	*373*		*79*	*171*		*106*			*257*		
Satflow rate	*1547*	*2753*		*3001*	*1629*		*1578*			*3061*		
Lost time	*2.0*	*2.0*		*2.0*	*2.0*		*2.0*			*2.0*		
Green ratio	*0.14*	*0.43*		*0.14*	*0.43*		*0.21*			*0.21*		
Lane group cap.	*221*	*1180*		*429*	*698*		*338*			*656*		
v/c ratio	*0.06*	*0.32*		*0.18*	*0.24*		*0.31*			*0.39*		
Flow ratio	*0.01*	*0.14*		*0.03*	*0.10*		*0.07*			*0.08*		
Crit. lane group	*N*	*Y*		*Y*	*N*		*N*			*Y*		
Sum flow ratios	*0.25*											
Lost time/cycle	*15.00*											
Critical v/c ratio	*0.31*											

Lane Group Capacity, Control Delay, and LOS Determination

	EB			WB			NB			SB		
Lane group	*L*	*TR*		*L*	*T*		*L*			*L*		
Adj. flow rate	*14*	*373*		*79*	*171*		*106*			*257*		
Lane group cap.	*221*	*1180*		*429*	*698*		*338*			*656*		
v/c ratio	*0.06*	*0.32*		*0.18*	*0.24*		*0.31*			*0.39*		
Green ratio	*0.14*	*0.43*		*0.14*	*0.43*		*0.21*			*0.21*		
Unif. delay d1	*25.9*	*13.2*		*26.4*	*12.8*		*23.2*			*23.6*		
Delay factor k	*0.50*	*0.50*		*0.50*	*0.50*		*0.50*			*0.50*		
Increm. delay d2	*0.6*	*0.7*		*0.9*	*0.8*		*2.4*			*1.8*		
PF factor	*1.000*	*1.000*		*1.000*	*1.000*		*1.000*			*1.000*		
Control delay	*26.5*	*13.9*		*27.4*	*13.6*		*25.6*			*25.3*		
Lane group LOS	*C*	*B*		*C*	*B*		*C*			*C*		
Apprch. delay	*14.4*			*17.9*			*25.6*			*25.3*		
Approach LOS	*B*			*B*			*C*			*C*		
Intersec. delay	*19.3*			Intersection LOS						*B*		

HCS2000™ Copyright © 2000 University of Florida, All Rights Reserved Version 4.1

INPUT WORKSHEET

General Information		Site Information	
Analyst	*TMC*	Intersection	
Agency or Co.	*TH0MAS & MILLER,LLC*	Area Type	*CBD or Similar*
Date Performed	*11/29/2001*	Jurisdiction	
Time Period	*PM PEAK*	Analysis Year	*2005*

Intersection Geometry

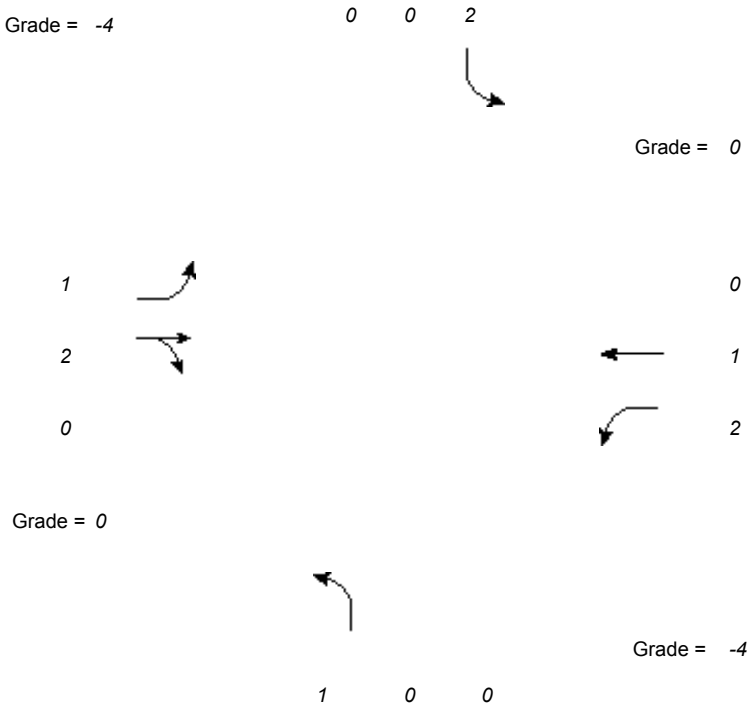

Volume and Timing Input

	EB			WB			NB			SB		
	LT	TH	RT	LT	TH	RT	LT	TH	RT	LT	TH	RT
Volume (vph)	*19*	*112*	*543*	*53*	*440*		*49*			*119*		
% Heavy veh	*5*	*5*	*5*	*5*	*5*		*5*			*5*		
PHF	*0.90*	*0.90*	*0.90*	*0.90*	*0.90*		*0.90*			*0.90*		
Actuated (P/A)	*P*	*P*	*P*	*P*	*P*	*P*	*P*			*P*		
Startup lost time	*2.0*	*2.0*		*2.0*	*2.0*		*2.0*			*2.0*		
Ext. eff. green	*2.0*	*2.0*		*2.0*	*2.0*		*2.0*			*2.0*		
Arrival type	*3*	*3*		*3*	*3*		*3*			*3*		
Ped volume	*0*			*0*			*0*			*0*		
Bicycle volume												
Parking (Y or N)	*N*		*N*	*N*		*N*	*N*		*N*	*N*		*N*
Parking/hr												
Bus stops/hr	*0*	*0*		*0*	*0*		*0*			*0*		
Ped timing	*0.0*			*0.0*			*3.0*			*0.0*		

	Excl. Left	Thru & RT	03	04	Excl. Left	06	07	08
Timing	G = *10.0*	G = *30.0*	G =	G =	G = *15.0*	G =	G =	G =
	Y =	Y =	Y =	Y =	Y =	Y =	Y =	Y =
Duration of Analysis (hrs) = *0.25*						Cycle Length C = *70.0*		

CAPACITY AND LOS WORKSHEET

General Information

Project Description *I-55 & MALLORY AVE PROPOSED SPUI*

Capacity Analysis

	EB			WB			NB			SB		
Lane group	*L*	*TR*		*L*	*T*		*L*			*L*		
Adj. flow rate	*21*	*616*		*59*	*489*		*54*			*132*		
Satflow rate	*1547*	*2724*		*3001*	*1629*		*1578*			*3061*		
Lost time	*2.0*	*2.0*		*2.0*	*2.0*		*2.0*			*2.0*		
Green ratio	*0.14*	*0.43*		*0.14*	*0.43*		*0.21*			*0.21*		
Lane group cap.	*221*	*1167*		*429*	*698*		*338*			*656*		
v/c ratio	*0.10*	*0.53*		*0.14*	*0.70*		*0.16*			*0.20*		
Flow ratio	*0.01*	*0.23*		*0.02*	*0.30*		*0.03*			*0.04*		
Crit. lane group	*N*	*N*		*Y*	*Y*		*N*			*Y*		
Sum flow ratios	*0.36*											
Lost time/cycle	*15.00*											
Critical v/c ratio	*0.46*											

Lane Group Capacity, Control Delay, and LOS Determination

	EB			WB			NB			SB		
Lane group	*L*	*TR*		*L*	*T*		*L*			*L*		
Adj. flow rate	*21*	*616*		*59*	*489*		*54*			*132*		
Lane group cap.	*221*	*1167*		*429*	*698*		*338*			*656*		
v/c ratio	*0.10*	*0.53*		*0.14*	*0.70*		*0.16*			*0.20*		
Green ratio	*0.14*	*0.43*		*0.14*	*0.43*		*0.21*			*0.21*		
Unif. delay d1	*26.1*	*14.8*		*26.2*	*16.3*		*22.4*			*22.6*		
Delay factor k	*0.50*	*0.50*		*0.50*	*0.50*		*0.50*			*0.50*		
Increm. delay d2	*0.9*	*1.7*		*0.7*	*5.8*		*1.0*			*0.7*		
PF factor	*1.000*	*1.000*		*1.000*	*1.000*		*1.000*			*1.000*		
Control delay	*26.9*	*16.5*		*26.9*	*22.1*		*23.4*			*23.3*		
Lane group LOS	*C*	*B*		*C*	*C*		*C*			*C*		
Apprch. delay	*16.8*			*22.6*			*23.4*			*23.3*		
Approach LOS	*B*			*C*			*C*			*C*		
Intersec. delay	*20.0*			Intersection LOS						*C*		

HCS2000™ Copyright © 2000 University of Florida, All Rights Reserved Version 4.1

HCS2000™ Copyright © 2000 University of Florida, All Rights Reserved Version 4.1

HCS2000™ Copyright © 2000 University of Florida, All Rights Reserved Version 4.1

RAMP JUNCTIONS

HCS2000: Ramps and Ramp Junctions Release 4.1

Diverge Analysis

Analyst:	Fischbach
Agency/Co.:	Fischbach
Date performed:	June 2001
Analysis time period:	AM Peak Hour
Freeway/dir or travel:	Northbound I-55
Junction:	Northbound off-ramp to Mallory
Jurisdiction:	Memphis, TN
Analysis Year:	2025 DHVs
Description:	10019 PROPOSED

Freeway Data

Type of analysis	Diverge	
Number of lanes in freeway	3	
Free-flow speed on freeway	55.0	mph
Volume on freeway	6432	vph

Off Ramp Data

Side of freeway	Right	
Number of lanes in ramp	1	
Free-Flow speed on ramp	35.0	mph
Volume on ramp	1185	vph
Length of first accel/decel lane	200	ft
Length of second accel/decel lane		ft

Adjacent Ramp Data (if one exists)

Does adjacent ramp exist?	Yes	
Volume on adjacent ramp	593	vph
Position of adjacent ramp	Downstream	
Type of adjacent ramp	On	
Distance to adjacent ramp	1800	ft

Conversion to pc/h Under Base Conditions

Junction Components	Freeway	Ramp	Adjacent Ramp	
Volume, V (vph)	6432	1185	593	vph
Peak-hour factor, PHF	0.90	0.90	0.90	
Peak 15-min volume, v15	1787	329	165	v
Trucks and buses	24	7	7	%
Recreational vehicles	0	0	0	%
Terrain type:	Level	Level	Level	
Grade	0.00 %	0.00 %	0.00 %	
Length	0.00 mi	0.00 mi	0.00 mi	
Trucks and buses PCE, ET	1.5	1.5	1.5	
Recreational vehicle PCE, ER	1.2	1.2	1.2	
Heavy vehicle adjustment, fHV	0.893	0.966	0.966	
Driver population factor, fP	1.00	1.00	1.00	
Flow rate, vp	8004	1363	682	pcph

Estimation of V12 Diverge Areas

L_{EQ} = 0.00 (Equation 25-8 or 25-9)

P_{FD} = 0.497 Using Equation 5

$v_{12} = v_R + (v_F - v_R) P_{FD}$ = 4665 pc/h

Capacity Checks

	Actual	Maximum	LOS F?
$v_{Fi} = v_F$	8004	6750	Yes
v_{12}	4665	4400	Yes
$v_{FO} = v_F - v_R$	6641	6750	No
v_R	1363	2000	No

Level of Service Determination (if not F)

Density, $D = 4.252 + 0.0086 v_R - 0.009 L_D$ = 42.6 pc/mi/ln

Level of service for ramp-freeway junction areas of influence F

Speed Estimation

Intermediate speed variable, D_S = 0.551

Space mean speed in ramp influence area, S_R = 48 mph

Space mean speed in outer lanes, S_O = 51.2 mph

Space mean speed for all vehicles, S = 49.2 mph

HCS2000: Ramps and Ramp Junctions Release 4.1

Diverge Analysis

Analyst:	Fischbach
Agency/Co.:	Fischbach
Date performed:	June 2001
Analysis time period:	PM Peak Hour
Freeway/dir or travel:	Northbound I-55
Junction:	Northbound off-ramp to Mallory
Jurisdiction:	Memphis, TN
Analysis Year:	2025 DHVs
Description:	10019 PROPOSED

Freeway Data

Type of analysis	Diverge	
Number of lanes in freeway	3	
Free-flow speed on freeway	55.0	mph
Volume on freeway	4486	vph

Off Ramp Data

Side of freeway	Right	
Number of lanes in ramp	1	
Free-Flow speed on ramp	35.0	mph
Volume on ramp	615	vph
Length of first accel/decel lane	200	ft
Length of second accel/decel lane		ft

Adjacent Ramp Data (if one exists)

Does adjacent ramp exist?	Yes	
Volume on adjacent ramp	879	vph
Position of adjacent ramp	Downstream	
Type of adjacent ramp	On	
Distance to adjacent ramp	1800	ft

Conversion to pc/h Under Base Conditions

Junction Components	Freeway		Ramp		Adjacent Ramp		
Volume, V (vph)	4486		615		879		vph
Peak-hour factor, PHF	0.90		0.90		0.90		
Peak 15-min volume, v15	1246		171		244		v
Trucks and buses	24		7		7		%
Recreational vehicles	0		0		0		%
Terrain type:	Level		Level		Level		
Grade	0.00	%	0.00	%	0.00	%	
Length	0.00	mi	0.00	mi	0.00	mi	
Trucks and buses PCE, ET	1.5		1.5		1.5		
Recreational vehicle PCE, ER	1.2		1.2		1.2		
Heavy vehicle adjustment, fHV	0.893		0.966		0.966		
Driver population factor, fP	1.00		1.00		1.00		
Flow rate, vp	5583		707		1011		pcph

Estimation of V12 Diverge Areas

L_{EQ} = 0.00 (Equation 25-8 or 25-9)

P_{FD} = 0.588 Using Equation 5

$v_{12} = v_R + (v_F - v_R) P_{FD}$ = 3574 pc/h

Capacity Checks

	Actual	Maximum	LOS F?
$v_{Fi} = v_F$	5583	6750	No
v_{12}	3574	4400	No
$v_{FO} = v_F - v_R$	4876	6750	No
v_R	707	2000	No

Level of Service Determination (if not F)

Density, $D = 4.252 + 0.0086 v_R - 0.009 L_D$ = 33.2 pc/mi/ln

Level of service for ramp-freeway junction areas of influence D

Speed Estimation

Intermediate speed variable, D_S = 0.492

Space mean speed in ramp influence area, S_R = 49 mph

Space mean speed in outer lanes, S_O = 56.4 mph

Space mean speed for all vehicles, S = 51.2 mph

HCS2000: Ramps and Ramp Junctions Release 4.1

Merge Analysis

Analyst:	Fischbach
Agency/Co.:	Fischbach
Date performed:	June 2001
Analysis time period:	AM Peak Hour
Freeway/dir or travel:	Northbound I-55
Junction:	on-ramp from Mallory
Jurisdiction:	Memphis, TN
Analysis Year:	2025 DHVs
Description:	10019 PROPOSED

Freeway Data

Type of analysis	50.6	
Number of lanes in freeway	3	
Free-flow speed on freeway	55.0	mph
Volume on freeway	5247	vph

On Ramp Data

Side of freeway	Right	
Number of lanes in ramp	1	
Free-flow speed on ramp	35.0	mph
Volume on ramp	593	vph
Length of first accel/decel lane	400	ft
Length of second accel/decel lane		ft

Adjacent Ramp Data (if one exists)

Does adjacent ramp exist?	Yes	
Volume on adjacent Ramp	1185	vph
Position of adjacent Ramp	Upstream	
Type of adjacent Ramp	Off	
Distance to adjacent Ramp	1800	ft

Conversion to pc/h Under Base Conditions

Junction Components	Freeway	Ramp	Adjacent Ramp	
Volume, V (vph)	5247	593	1185	vph
Peak-hour factor, PHF	0.90	0.90	0.90	
Peak 15-min volume, v15	1458	165	329	v
Trucks and buses	24	7	7	%
Recreational vehicles	0	0	0	%
Terrain type:	Level	Level	Level	
Grade	%	%	%	
Length	mi	mi	mi	
Trucks and buses PCE, ET	1.5	1.5	1.5	
Recreational vehicle PCE, ER	1.2	1.2	1.2	
Heavy vehicle adjustment, fHV	0.893	0.966	0.966	
Driver population factor, fP	1.00	1.00	1.00	
Flow rate, vp	6530	682	1363	pcph

Estimation of V12 Merge Areas

L_{EQ} = (Equation 25-2 or 25-3)

P_{FM} = 0.589 Using Equation 1

$v_{12} = v_F (P_{FM})$ = 3844 pc/h

Capacity Checks

	Actual	Maximum	LOS F?
v_{FO}	7212	6750	Yes
v_{R12}	4526	4600	No

Level of Service Determination (if not F)

Density, $D = 5.475 + 0.00734 v_R + 0.0078 v_{R12} - 0.00627 L_A$ = 38.0 pc/mi/ln

Level of service for ramp-freeway junction areas of influence F

Speed Estimation

Intermediate speed variable,	M_S = 0.653	
Space mean speed in ramp influence area,	S_R = 46.5	mph
Space mean speed in outer lanes,	S_O = 46.2	mph
Space mean speed for all vehicles,	S = 46.4	mph

HCS2000: Ramps and Ramp Junctions Release 4.1

Merge Analysis

Analyst:	Fischbach
Agency/Co.:	Fischbach
Date performed:	June 2001
Analysis time period:	PM Peak Hour
Freeway/dir or travel:	Northbound I-55
Junction:	on-ramp from Mallory
Jurisdiction:	Memphis, TN
Analysis Year:	2025 DHVs
Description:	10019 PROPOSED

Freeway Data

Type of analysis	51.3	
Number of lanes in freeway	3	
Free-flow speed on freeway	55.0	mph
Volume on freeway	3871	vph

On Ramp Data

Side of freeway	Right	
Number of lanes in ramp	1	
Free-flow speed on ramp	35.0	mph
Volume on ramp	879	vph
Length of first accel/decel lane	400	ft
Length of second accel/decel lane		ft

Adjacent Ramp Data (if one exists)

Does adjacent ramp exist?	Yes	
Volume on adjacent Ramp	615	vph
Position of adjacent Ramp	Upstream	
Type of adjacent Ramp	Off	
Distance to adjacent Ramp	1800	ft

Conversion to pc/h Under Base Conditions

Junction Components	Freeway	Ramp	Adjacent Ramp	
Volume, V (vph)	3871	879	615	vph
Peak-hour factor, PHF	0.90	0.90	0.90	
Peak 15-min volume, v15	1075	244	171	v
Trucks and buses	24	7	7	%
Recreational vehicles	0	0	0	%
Terrain type:	Level	Level	Level	
Grade	%	%	%	
Length	mi	mi	mi	
Trucks and buses PCE, ET	1.5	1.5	1.5	
Recreational vehicle PCE, ER	1.2	1.2	1.2	
Heavy vehicle adjustment, fHV	0.893	0.966	0.966	
Driver population factor, fP	1.00	1.00	1.00	
Flow rate, vp	4817	1011	707	pcph

Estimation of V12 Merge Areas

L_{EQ} = (Equation 25-2 or 25-3)

P_{FM} = 0.589 Using Equation 1

$v_{12} = v_F (P_{FM})$ = 2836 pc/h

Capacity Checks

	Actual	Maximum	LOS F?
v_{FO}	5828	6750	No
v_{R12}	3847	4600	No

Level of Service Determination (if not F)

Density, $D = 5.475 + 0.00734 v_R + 0.0078 v_R - 0.00627 L_{12}$ = 32.5 pc/mi/ln

Level of service for ramp-freeway junction areas of influence A = D

Speed Estimation

Intermediate speed variable, M_S = 0.476

Space mean speed in ramp influence area, S_R = 48.8 mph

Space mean speed in outer lanes, S_O = 49.7 mph

Space mean speed for all vehicles, S = 49.1 mph

HCS2000: Ramps and Ramp Junctions Release 4.1

Diverge Analysis

Analyst:	Fischbach
Agency/Co.:	Fischbach
Date performed:	June 2001
Analysis time period:	AM Peak Hour
Freeway/dir or travel:	Southbound I-55
Junction:	Off-ramp to Mallory
Jurisdiction:	Memphis, TN
Analysis Year:	2025 DHVs
Description:	10019 PROPOSED

Freeway Data

Type of analysis	Diverge	
Number of lanes in freeway	3	
Free-flow speed on freeway	55.0	mph
Volume on freeway	4561	vph

Off Ramp Data

Side of freeway	Right	
Number of lanes in ramp	1	
Free-Flow speed on ramp	35.0	mph
Volume on ramp	917	vph
Length of first accel/decel lane	500	ft
Length of second accel/decel lane		ft

Adjacent Ramp Data (if one exists)

Does adjacent ramp exist?	Yes	
Volume on adjacent ramp	831	vph
Position of adjacent ramp	Downstream	
Type of adjacent ramp	On	
Distance to adjacent ramp	1800	ft

Conversion to pc/h Under Base Conditions

Junction Components	Freeway		Ramp		Adjacent Ramp		
Volume, V (vph)	4561		917		831		vph
Peak-hour factor, PHF	0.90		0.90		0.90		
Peak 15-min volume, v15	1267		255		231		v
Trucks and buses	24		7		7		%
Recreational vehicles	0		0		0		%
Terrain type:	Level		Level		Level		
Grade	0.00	%	0.00	%	0.00	%	
Length	0.00	mi	0.00	mi	0.00	mi	
Trucks and buses PCE, ET	1.5		1.5		1.5		
Recreational vehicle PCE, ER	1.2		1.2		1.2		
Heavy vehicle adjustment, fHV	0.893		0.966		0.966		
Driver population factor, fP	1.00		1.00		1.00		
Flow rate, vp	5676		1055		956		pcph

Estimation of V12 Diverge Areas

L_{EQ} = 0.00 (Equation 25-8 or 25-9)

P_{FD} = 0.570 Using Equation 5

$v_{12} = v_R + (v_F - v_R) P_{FD}$ = 3687 pc/h

Capacity Checks

	Actual	Maximum	LOS F?
$v_{Fi} = v_F$	5676	6750	No
v_{12}	3687	4400	No
$v_{FO} = v_F - v_R$	4621	6750	No
v_R	1055	2000	No

Level of Service Determination (if not F)

Density, $D = 4.252 + 0.0086 v_R - 0.009 L_D$ = 31.5 pc/mi/ln

Level of service for ramp-freeway junction areas of influence D

Speed Estimation

Intermediate speed variable, D_S = 0.523

Space mean speed in ramp influence area, S_R = 48 mph

Space mean speed in outer lanes, S_O = 56.5 mph

Space mean speed for all vehicles, S = 50.8 mph

HCS2000: Ramps and Ramp Junctions Release 4.1

Diverge Analysis

Analyst:	Fischbach
Agency/Co.:	Fischbach
Date performed:	June 2001
Analysis time period:	PM Peak Hour
Freeway/dir or travel:	Southbound I-55
Junction:	Off-ramp to Mallory
Jurisdiction:	Memphis, TN
Analysis Year:	2025 DHVs
Description:	10019 PROPOSED

Freeway Data

Type of analysis	Diverge	
Number of lanes in freeway	3	
Free-flow speed on freeway	55.0	mph
Volume on freeway	5847	vph

Off Ramp Data

Side of freeway	Right	
Number of lanes in ramp	1	
Free-Flow speed on ramp	35.0	mph
Volume on ramp	461	vph
Length of first accel/decel lane	500	ft
Length of second accel/decel lane		ft

Adjacent Ramp Data (if one exists)

Does adjacent ramp exist?	Yes	
Volume on adjacent ramp	1173	vph
Position of adjacent ramp	Downstream	
Type of adjacent ramp	On	
Distance to adjacent ramp	1800	ft

Conversion to pc/h Under Base Conditions

Junction Components	Freeway		Ramp		Adjacent Ramp		
Volume, V (vph)	5847		461		1173		vph
Peak-hour factor, PHF	0.90		0.90		0.90		
Peak 15-min volume, v15	1624		128		326		v
Trucks and buses	24		7		7		%
Recreational vehicles	0		0		0		%
Terrain type:	Level		Level		Level		
Grade	0.00	%	0.00	%	0.00	%	
Length	0.00	mi	0.00	mi	0.00	mi	
Trucks and buses PCE, ET	1.5		1.5		1.5		
Recreational vehicle PCE, ER	1.2		1.2		1.2		
Heavy vehicle adjustment, fHV	0.893		0.966		0.966		
Driver population factor, fP	1.00		1.00		1.00		
Flow rate, vp	7276		530		1349		pcph

Estimation of V12 Diverge Areas

L_{EQ} = 0.00 (Equation 25-8 or 25-9)

P_{FD} = 0.554 Using Equation 5

$v_{12} = v_R + (v_F - v_R) P_{FD}$ = 4265 pc/h

Capacity Checks

	Actual	Maximum	LOS F?
$v_{Fi} = v_F$	7276	6750	Yes
v_{12}	4265	4400	No
$v_{FO} = v_F - v_R$	6746	6750	No
v_R	530	2000	No

Level of Service Determination (if not F)

Density, $D = 4.252 + 0.0086 v_R - 0.009 L_D$ = 36.4 pc/mi/ln

Level of service for ramp-freeway junction areas of influence F

Speed Estimation

Intermediate speed variable, D_S = 0.476

Space mean speed in ramp influence area, S_R = 49 mph

Space mean speed in outer lanes, S_O = 52.5 mph

Space mean speed for all vehicles, S = 50.3 mph

HCS2000: Ramps and Ramp Junctions Release 4.1

Merge Analysis

Analyst:	Fischbach
Agency/Co.:	Fischbach
Date performed:	June 2001
Analysis time period:	AM Peak Hour
Freeway/dir or travel:	Southbound I-55
Junction:	On-ramp from Mallory
Jurisdiction:	Memphis, TN
Analysis Year:	2025 DHVs
Description:	10019 PROPOSED

Freeway Data

Type of analysis	51.5	
Number of lanes in freeway	3	
Free-flow speed on freeway	55.0	mph
Volume on freeway	3644	vph

On Ramp Data

Side of freeway	Right	
Number of lanes in ramp	1	
Free-flow speed on ramp	35.0	mph
Volume on ramp	831	vph
Length of first accel/decel lane	500	ft
Length of second accel/decel lane		ft

Adjacent Ramp Data (if one exists)

Does adjacent ramp exist?	Yes	
Volume on adjacent Ramp	917	vph
Position of adjacent Ramp	Upstream	
Type of adjacent Ramp	Off	
Distance to adjacent Ramp	1800	ft

Conversion to pc/h Under Base Conditions

Junction Components	Freeway	Ramp	Adjacent Ramp	
Volume, V (vph)	3644	831	917	vph
Peak-hour factor, PHF	0.90	0.90	0.90	
Peak 15-min volume, v15	1012	231	255	v
Trucks and buses	24	7	7	%
Recreational vehicles	0	0	0	%
Terrain type:	Level	Level	Level	
Grade	%	%	%	
Length	mi	mi	mi	
Trucks and buses PCE, ET	1.5	1.5	1.5	
Recreational vehicle PCE, ER	1.2	1.2	1.2	
Heavy vehicle adjustment, fHV	0.893	0.966	0.966	
Driver population factor, fP	1.00	1.00	1.00	
Flow rate, vp	4535	956	1055	pcph

Estimation of V12 Merge Areas

L_{EQ} = (Equation 25-2 or 25-3)

P_{FM} = 0.591 Using Equation 1

$v_{12} = v_F (P_{FM})$ = 2682 pc/h

Capacity Checks

	Actual	Maximum	LOS F?
v_{FO}	5491	6750	No
v_{R12}	3638	4600	No

Level of Service Determination (if not F)

Density, $D = 5.475 + 0.00734 v_R + 0.0078 v_{R12} - 0.00627 L_A$ = 30.3 pc/mi/ln

Level of service for ramp-freeway junction areas of influence D

Speed Estimation

Intermediate speed variable, M_S = 0.434

Space mean speed in ramp influence area, S_R = 49.4 mph

Space mean speed in outer lanes, S_O = 50.1 mph

Space mean speed for all vehicles, S = 49.6 mph

HCS2000: Ramps and Ramp Junctions Release 4.1

Merge Analysis

Analyst:	Fischbach
Agency/Co.:	Fischbach
Date performed:	June 2001
Analysis time period:	PM Peak Hour
Freeway/dir or travel:	Southbound I-55
Junction:	On-ramp from Mallory
Jurisdiction:	Memphis, TN
Analysis Year:	2025 DHVs
Description:	10019 PROPOSED

Freeway Data

Type of analysis	50.0	
Number of lanes in freeway	3	
Free-flow speed on freeway	55.0	mph
Volume on freeway	5386	vph

On Ramp Data

Side of freeway	Right	
Number of lanes in ramp	1	
Free-flow speed on ramp	35.0	mph
Volume on ramp	1173	vph
Length of first accel/decel lane	500	ft
Length of second accel/decel lane		ft

Adjacent Ramp Data (if one exists)

Does adjacent ramp exist?	Yes	
Volume on adjacent Ramp	461	vph
Position of adjacent Ramp	Upstream	
Type of adjacent Ramp	Off	
Distance to adjacent Ramp	1800	ft

Conversion to pc/h Under Base Conditions

Junction Components	Freeway	Ramp	Adjacent Ramp	
Volume, V (vph)	5386	1173	461	vph
Peak-hour factor, PHF	0.90	0.90	0.90	
Peak 15-min volume, v15	1496	326	128	v
Trucks and buses	24	7	7	%
Recreational vehicles	0	0	0	%
Terrain type:	Level	Level	Level	
Grade	%	%	%	
Length	mi	mi	mi	
Trucks and buses PCE, ET	1.5	1.5	1.5	
Recreational vehicle PCE, ER	1.2	1.2	1.2	
Heavy vehicle adjustment, fHV	0.893	0.966	0.966	
Driver population factor, fP	1.00	1.00	1.00	
Flow rate, vp	6703	1349	530	pcph

Estimation of V12 Merge Areas

L_{EQ} = (Equation 25-2 or 25-3)

P_{FM} = 0.591 Using Equation 1

$v_{12} = v_F (P_{FM})$ = 3965 pc/h

Capacity Checks

	Actual	Maximum	LOS F?
v_{FO}	8052	6750	Yes
v_{R12}	5314	4600	Yes

Level of Service Determination (if not F)

Density, $D = 5.475 + 0.00734 v_R + 0.0078 v_R - 0.00627 L_A$ = 43.2 pc/mi/ln

Level of service for ramp-freeway junction areas of influence F

Speed Estimation

Intermediate speed variable, M_S = 1.078

Space mean speed in ramp influence area, S_R = 41.0 mph

Space mean speed in outer lanes, S_O = 45.8 mph

Space mean speed for all vehicles, S = 42.5 mph

SURFACE STREET INTERSECTIONS

INPUT WORKSHEET

General Information		Site Information	
Analyst	*TMC*	Intersection	
Agency or Co.	*TH0MAS & MILLER,LLC*	Area Type	*CBD or Similar*
Date Performed	*11/29/2001*	Jurisdiction	
Time Period	*AM PEAK*	Analysis Year	*2025*

Intersection Geometry

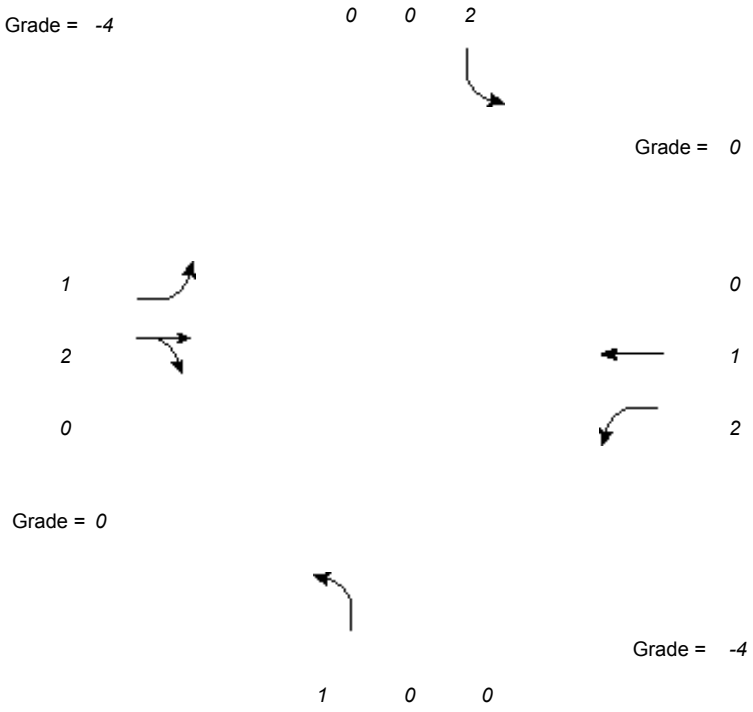

Volume and Timing Input

	EB			WB			NB			SB		
	LT	TH	RT	LT	TH	RT	LT	TH	RT	LT	TH	RT
Volume (vph)	*19*	*286*	*387*	*444*	*126*		*121*			*816*		
% Heavy veh	*5*	*5*	*5*	*5*	*5*		*5*			*5*		
PHF	*0.90*	*0.90*	*0.90*	*0.90*	*0.90*		*0.90*			*0.90*		
Actuated (P/A)	*P*	*P*	*P*	*P*	*P*	*P*	*P*			*P*		
Startup lost time	*2.0*	*2.0*		*2.0*	*2.0*		*2.0*			*2.0*		
Ext. eff. green	*2.0*	*2.0*		*2.0*	*2.0*		*2.0*			*2.0*		
Arrival type	*3*	*3*		*3*	*3*		*3*			*3*		
Ped volume	*0*			*0*			*0*			*0*		
Bicycle volume												
Parking (Y or N)	*N*		*N*	*N*		*N*	*N*		*N*	*N*		*N*
Parking/hr												
Bus stops/hr	*0*	*0*		*0*	*0*		*0*			*0*		
Ped timing	*0.0*			*0.0*			*3.0*			*0.0*		

	Excl. Left	Thru & RT	03	04	Excl. Left	06	07	08
Timing	G = *15.0*	G = *25.0*	G =	G =	G = *20.0*	G =	G =	G =
	Y =	Y =	Y =	Y =	Y =	Y =	Y =	Y =
Duration of Analysis (hrs) = *0.25*						Cycle Length C = *75.0*		

CAPACITY AND LOS WORKSHEET

General Information

Project Description *I-55 & MALLORY AVE PROPOSED SPUI*

Capacity Analysis

	EB			WB			NB			SB		
Lane group	*L*	*TR*		*L*	*T*		*L*			*L*		
Adj. flow rate	*21*	*670*		*493*	*140*		*134*			*907*		
Satflow rate	*1547*	*2850*		*3001*	*1629*		*1578*			*3061*		
Lost time	*2.0*	*2.0*		*2.0*	*2.0*		*2.0*			*2.0*		
Green ratio	*0.20*	*0.33*		*0.20*	*0.33*		*0.27*			*0.27*		
Lane group cap.	*309*	*950*		*600*	*543*		*421*			*816*		
v/c ratio	*0.07*	*0.71*		*0.82*	*0.26*		*0.32*			*1.11*		
Flow ratio	*0.01*	*0.24*		*0.16*	*0.09*		*0.08*			*0.30*		
Crit. lane group	*N*	*Y*		*Y*	*N*		*N*			*Y*		
Sum flow ratios	*0.70*											
Lost time/cycle	*15.00*											
Critical v/c ratio	*0.87*											

Lane Group Capacity, Control Delay, and LOS Determination

	EB			WB			NB			SB		
Lane group	*L*	*TR*		*L*	*T*		*L*			*L*		
Adj. flow rate	*21*	*670*		*493*	*140*		*134*			*907*		
Lane group cap.	*309*	*950*		*600*	*543*		*421*			*816*		
v/c ratio	*0.07*	*0.71*		*0.82*	*0.26*		*0.32*			*1.11*		
Green ratio	*0.20*	*0.33*		*0.20*	*0.33*		*0.27*			*0.27*		
Unif. delay d1	*24.3*	*21.8*		*28.7*	*18.2*		*22.0*			*27.5*		
Delay factor k	*0.50*	*0.50*		*0.50*	*0.50*		*0.50*			*0.50*		
Increm. delay d2	*0.4*	*4.4*		*12.0*	*1.1*		*2.0*			*66.7*		
PF factor	*1.000*	*1.000*		*1.000*	*1.000*		*1.000*			*1.000*		
Control delay	*24.8*	*26.2*		*40.7*	*19.4*		*24.0*			*94.2*		
Lane group LOS	*C*	*C*		*D*	*B*		*C*			*F*		
Apprch. delay	*26.1*			*36.0*			*24.0*			*94.2*		
Approach LOS	*C*			*D*			*C*			*F*		
Intersec. delay	*54.8*			Intersection LOS						*D*		

HCS2000™ Copyright © 2000 University of Florida, All Rights Reserved Version 4.1

INPUT WORKSHEET

General Information		Site Information	
Analyst	*TMC*	Intersection	
Agency or Co.	*TH0MAS & MILLER,LLC*	Area Type	*CBD or Similar*
Date Performed	*11/29/2001*	Jurisdiction	
Time Period	*PM PEAK*	Analysis Year	*2025*

Intersection Geometry

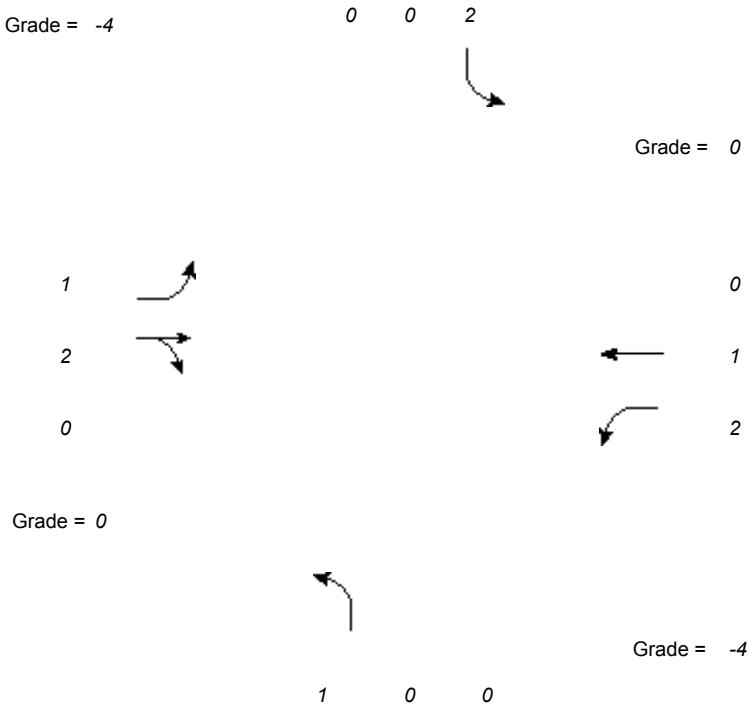

Volume and Timing Input

	EB			WB			NB			SB		
	LT	TH	RT	LT	TH	RT	LT	TH	RT	LT	TH	RT
Volume (vph)	*27*	*112*	*675*	*498*	*808*		*59*			*410*		
% Heavy veh	*5*	*5*	*5*	*5*	*5*		*5*			*5*		
PHF	*0.90*	*0.90*	*0.90*	*0.90*	*0.90*		*0.90*			*0.90*		
Actuated (P/A)	*P*	*P*		*P*	*P*		*P*			*P*		
Startup lost time	*2.0*	*2.0*		*2.0*	*2.0*		*2.0*			*2.0*		
Ext. eff. green	*2.0*	*2.0*		*2.0*	*2.0*		*2.0*			*2.0*		
Arrival type	*3*	*3*		*3*	*3*		*3*			*3*		
Ped volume	*0*			*0*			*0*			*0*		
Bicycle volume												
Parking (Y or N)	*N*		*N*	*N*		*N*	*N*		*N*	*N*		*N*
Parking/hr												
Bus stops/hr	*0*	*0*		*0*	*0*		*0*			*0*		
Ped timing	*0.0*			*0.0*			*3.0*			*0.0*		

	Excl. Left	Thru Only	03	04	Excl. Left	06	07	08
Timing	G = *15.0*	G = *35.0*	G =	G =	G = *10.0*	G =	G =	G =
	Y =	Y =	Y =	Y =	Y =	Y =	Y =	Y =
Duration of Analysis (hrs) = *0.25*						Cycle Length C = *75.0*		

CAPACITY AND LOS WORKSHEET

General Information

Project Description *I-55 & MALLORY AVE PROPOSED SPUI*

Capacity Analysis

	EB			WB			NB			SB		
Lane group	*L*	*TR*		*L*	*T*		*L*			*L*		
Adj. flow rate	*30*	*741*		*553*	*898*		*66*			*456*		
Satflow rate	*1547*	*2708*		*3001*	*1629*		*1578*			*3061*		
Lost time	*2.0*	*2.0*		*2.0*	*2.0*		*2.0*			*2.0*		
Green ratio	*0.20*	*0.47*		*0.20*	*0.47*		*0.13*			*0.13*		
Lane group cap.	*309*	*1264*		*600*	*760*		*210*			*408*		
v/c ratio	*0.10*	*0.59*		*0.92*	*1.18*		*0.31*			*1.12*		
Flow ratio	*0.02*	*0.27*		*0.18*	*0.55*		*0.04*			*0.15*		
Crit. lane group	*N*	*N*		*Y*	*Y*		*N*			*Y*		
Sum flow ratios	*0.88*											
Lost time/cycle	*15.00*											
Critical v/c ratio	*1.11*											

Lane Group Capacity, Control Delay, and LOS Determination

	EB			WB			NB			SB		
Lane group	*L*	*TR*		*L*	*T*		*L*			*L*		
Adj. flow rate	*30*	*741*		*553*	*898*		*66*			*456*		
Lane group cap.	*309*	*1264*		*600*	*760*		*210*			*408*		
v/c ratio	*0.10*	*0.59*		*0.92*	*1.18*		*0.31*			*1.12*		
Green ratio	*0.20*	*0.47*		*0.20*	*0.47*		*0.13*			*0.13*		
Unif. delay d1	*24.5*	*14.7*		*29.4*	*20.0*		*29.4*			*32.5*		
Delay factor k	*0.50*	*0.50*		*0.50*	*0.50*		*0.50*			*0.50*		
Increm. delay d2	*0.6*	*2.0*		*21.8*	*95.0*		*3.9*			*80.5*		
PF factor	*1.000*	*1.000*		*1.000*	*1.000*		*1.000*			*1.000*		
Control delay	*25.1*	*16.7*		*51.2*	*115.0*		*33.3*			*113.0*		
Lane group LOS	*C*	*B*		*D*	*F*		*C*			*F*		
Apprch. delay	*17.0*			*90.7*			*33.3*			*113.0*		
Approach LOS	*B*			*F*			*C*			*F*		
Intersec. delay	*72.3*			Intersection LOS						*E*		

HCS2000™ Copyright © 2000 University of Florida, All Rights Reserved Version 4.1

HCS2000™ Copyright © 2000 University of Florida, All Rights Reserved Version 4.1

HCS2000™ Copyright © 2000 University of Florida, All Rights Reserved Version 4.1

HCS2000: Signalized Intersections Release 4.1a

Analyst: Fischbach
Date: October 2001
Period: AM Peak Hour
E/W St: Mallory Avenue

Inter.: Mallory and Riverport
Jurisd: Memphis, TN
Year : 2005 DHVs
N/S St: Riverport / prop. connector

SIGNALIZED INTERSECTION SUMMARY

	Eastbound			Westbound			Northbound			Southbound		
	L	T	R	L	T	R	L	T	R	L	T	R
No. Lanes	1	2	0	1	2	0	1	2	0	1	2	0
LGConfig	L	TR		L	TR		L	TR		L	TR	
Volume	115	368	274	55	147	27	144	1	44	27	5	104
Lane Width	12.0	12.0		12.0	12.0		12.0	12.0		12.0	12.0	
RTOR Vol			0			0			0			0

Duration 1.00 Area Type: All other areas

Signal Operations

Phase Combination	1	2	3	4		5	6	7	8
EB Left	A	A			NB Left	A	A		
Thru		A			Thru		A		
Right		A			Right		A		
Peds					Peds				
WB Left	A	A			SB Left	A	A		
Thru		A			Thru		A		
Right		A			Right		A		
Peds					Peds				
NB Right					EB Right				
SB Right					WB Right				
Green	5.0	45.0				5.0	15.0		
Yellow	5.0	5.0				5.0	5.0		
All Red	0.0	0.0				0.0	0.0		

Cycle Length: 90.0 secs

Intersection Performance Summary

Appr/ Lane Grp	Lane Group Capacity	Adj Sat Flow Rate (s)	Ratios v/c	Ratios g/C	Lane Group Delay	Lane Group LOS	Approach Delay	Approach LOS
Eastbound								
L	684	1752	0.18	0.61	7.6	A		
TR	1501	3002	0.45	0.50	14.7	B	13.6	B
Westbound								
L	355	1504	0.16	0.61	8.0	A		
TR	1658	3315	0.11	0.50	11.9	B	11.0	B
Northbound								
L	263	1504	0.58	0.28	32.1	C		
TR	429	2574	0.11	0.17	31.9	C	32.1	C
Southbound								
L	320	1752	0.09	0.28	24.1	C		
TR	497	2981	0.23	0.17	32.7	C	31.0	C

Intersection Delay = 17.6 (sec/veh) Intersection LOS = B

HCS2000: Signalized Intersections Release 4.1a

Analyst: Fischbach
Date: October 2001
Period: PM Peak Hour
E/W St: Mallory Avenue

Inter.: Mallory and Riverport
Jurisd: Memphis, TN
Year : 2005 DHVs
N/S St: Riverport / prop. connector

SIGNALIZED INTERSECTION SUMMARY

	Eastbound			Westbound			Northbound			Southbound		
	L	T	R	L	T	R	L	T	R	L	T	R
No. Lanes	1	2	0	1	2	0	1	2	0	1	2	0
LGConfig	L	TR		L	TR		L	TR		L	TR	
Volume	165	62	152	29	313	41	278	9	84	39	7	152
Lane Width	12.0	12.0		12.0	12.0		12.0	12.0		12.0	12.0	
RTOR Vol			0			0			0			0

Duration 0.25 Area Type: All other areas

Signal Operations

Phase Combination		1	2	3	4			5	6	7	8
EB	Left	A	A			NB	Left	A	A		
	Thru		A				Thru		A		
	Right		A				Right		A		
	Peds						Peds				
WB	Left	A	A			SB	Left	A	A		
	Thru		A				Thru		A		
	Right		A				Right		A		
	Peds						Peds				
NB	Right					EB	Right				
SB	Right					WB	Right				
Green		5.0	40.0					15.0	10.0		
Yellow		5.0	5.0					5.0	5.0		
All Red		0.0	0.0					0.0	0.0		

Cycle Length: 90.0 secs

Intersection Performance Summary

Appr/ Lane Grp	Lane Group Capacity	Adj Sat Flow Rate (s)	Ratios v/c	Ratios g/C	Lane Group Delay	Lane Group LOS	Approach Delay	Approach LOS
Eastbound								
L	520	1752	0.33	0.56	10.5	B		
TR	1233	2774	0.18	0.44	15.2	B	13.1	B
Westbound								
L	514	1504	0.06	0.56	9.3	A		
TR	1480	3330	0.25	0.44	15.7	B	15.2	B
Northbound								
L	365	1504	0.80	0.33	37.2	D		
TR	293	2634	0.33	0.11	37.6	D	37.3	D
Southbound								
L	434	1752	0.09	0.33	20.7	C		
TR	331	2981	0.50	0.11	38.9	D	35.3	D

Intersection Delay = 23.8 (sec/veh) Intersection LOS = C

HCS2000: Signalized Intersections Release 4.1a

Analyst: Fischbach
Date: October 2001
Period: AM Peak Hour
E/W St: Mallory Avenue

Inter.: Mallory and Riverport
Jurisd: Memphis, TN
Year : 2025 DHVs
N/S St: Riverport / prop. connector

SIGNALIZED INTERSECTION SUMMARY

	Eastbound			Westbound			Northbound			Southbound		
	L	T	R	L	T	R	L	T	R	L	T	R
No. Lanes	1	2	1	1	2	1	2	1	1	1	1	1
LGConfig	L	T	R	L	T	R	L	T	R	L	T	R
Volume	159	1308	699	140	642	35	367	2	112	41	7	135
Lane Width	12.0	12.0	12.0	12.0	12.0	12.0	12.0	12.0	12.0	12.0	12.0	12.0
RTOR Vol			0			0			0			0

Duration 1.00 Area Type: All other areas

Signal Operations

Phase Combination		1	2	3	4			5	6	7	8
EB	Left	A	A			NB	Left	A			
	Thru		A				Thru		A		
	Right		A				Right		A		
	Peds						Peds				
WB	Left	A	A			SB	Left	A	A		
	Thru		A				Thru		A		
	Right		A				Right		A		
	Peds						Peds				
NB	Right	A				EB	Right	A			
SB	Right	A				WB	Right	A			
Green		6.0	45.0					14.0	5.0		
Yellow		5.0	5.0					5.0	5.0		
All Red		0.0	0.0					0.0	0.0		

Cycle Length: 90.0 secs

Intersection Performance Summary

Appr/ Lane Grp	Lane Group Capacity	Adj Sat Flow Rate (s)	Ratios v/c	Ratios g/C	Lane Group Delay	Lane Group LOS	Approach Delay	Approach LOS
Eastbound								
L	432	1752	0.39	0.62	8.6	A		
T	1687	3374	0.82	0.50	22.4	C	18.1	B
R	957	1346	0.77	0.71	12.3	B		
Westbound								
L	180	1504	0.82	0.62	48.4	D		
T	1687	3374	0.40	0.50	14.2	B	19.6	B
R	1115	1568	0.03	0.71	3.9	A		
Northbound								
L	454	2918	0.85	0.16	53.2	D		
T	103	1845	0.02	0.06	40.3	D	48.9	D
R	239	1346	0.49	0.18	35.0-	C		
Southbound								
L	355	1752	0.12	0.27	25.1	C		
T	88	1583	0.08	0.06	40.7	D	33.0	C
R	279	1568	0.51	0.18	35.0+	D		

Intersection Delay = 23.2 (sec/veh) Intersection LOS = C

HCS2000: Signalized Intersections Release 4.1a

Analyst: Fischbach
Date: October 2001
Period: PM Peak Hour
E/W St: Mallory Avenue

Inter.: Mallory and Riverport
Jurisd: Memphis, TN
Year : 2025 DHVs
N/S St: Riverport / prop. connector

SIGNALIZED INTERSECTION SUMMARY

	Eastbound			Westbound			Northbound			Southbound		
	L	T	R	L	T	R	L	T	R	L	T	R
No. Lanes	1	2	1	1	2	1	2	1	1	1	1	1
LGConfig	L	T	R	L	T	R	L	T	R	L	T	R
Volume	227	464	387	74	1252	53	709	14	214	59	11	197
Lane Width	12.0	12.0	12.0	12.0	12.0	12.0	12.0	12.0	12.0	12.0	12.0	12.0
RTOR Vol			0			0			0			0

Duration 0.25 Area Type: All other areas

Signal Operations

Phase Combination		1	2	3	4			5	6	7	8
EB	Left	A	A			NB	Left	A			
	Thru		A				Thru		A		
	Right		A				Right		A		
	Peds						Peds				
WB	Left	A	A			SB	Left	A	A		
	Thru		A				Thru		A		
	Right		A				Right		A		
	Peds						Peds				
NB	Right	A				EB	Right	A			
SB	Right	A				WB	Right	A			
Green		9.0	34.0					22.0	5.0		
Yellow		5.0	5.0					5.0	5.0		
All Red		0.0	0.0					0.0	0.0		

Cycle Length: 90.0 secs

Intersection Performance Summary

Appr/ Lane Grp	Lane Group Capacity	Adj Sat Flow Rate (s)	Ratios v/c	Ratios g/C	Lane Group Delay	Lane Group LOS	Approach Delay	Approach LOS
Eastbound								
L	257	1752	0.93	0.53	61.3	E		
T	1275	3374	0.38	0.38	20.6	C	24.3	C
R	912	1346	0.45	0.68	7.0	A		
Westbound								
L	397	1504	0.20	0.53	11.1	B		
T	1275	3374	1.03	0.38	62.3	E	57.3	E
R	1063	1568	0.05	0.68	4.9	A		
Northbound								
L	713	2918	1.05	0.24	80.4	F		
T	103	1845	0.15	0.06	41.1	D	72.4	E
R	284	1346	0.79	0.21	47.8	D		
Southbound								
L	510	1752	0.12	0.36	19.6	B		
T	88	1583	0.14	0.06	41.2	D	32.6	C
R	331	1568	0.63	0.21	36.0	D		

Intersection Delay = 49.7 (sec/veh) Intersection LOS = D

APPENDIX E

COST ESTIMATES

COST DATA SHEET

PROJECT: I-55 & Mallory Avenue Interchange Modification Study
LOCATION: Memphis, Shelby County, Tennessee
LENGTH:
CROSS SECTION: 6 Lane Interstate (Single Point Urban Interchange)
With Improvements to Riverport Road

RIGHT-OF-WAY

Land, Improvements & Damages	(# Acres	1.70)	$544,000
Incidentals	(# Tracts	6)	$30,000
Relocation Payments	(Residences	0)	$0
	(Businesses	0)	$0
	(Non-Profits	0)	
Total Right-Of-Way Cost			**$574,000**

UTILITY RELOCATION

Reimbursable	$0	
Non-Reimbursable	$318,000	
Total Utility Adjustment Cost		**$318,000**

CONSTRUCTION

Clear and Grubbing	$15,000	
Earthwork	$570,000	
Pavement Removal	$385,000	
Drainage (Erosion Control = $110,000)	$565,000	
Structures (Preserv'n/Demol'n = $343,600)	$5,113,000	
Railroad Crossing (Gates & Signals)	$60,000	
Paving	$958,000	
Retaining Walls	$845,000	
Maintenance of Traffic	$350,000	
Topsoil	$4,000	
Seeding	$2,000	
Sodding	$24,000	
Signing	$150,000	
Signalization	$160,000	
Fence	$21,000	
Guardrail	$20,000	
Rip-rap or Slope Protection	$50,000	
Other Construction Items (8.5%)	$355,000	
Mobilization	$416,000	
10% Engineering and Contigencies	$1,006,000	
Total Construction Cost		**$11,069,000**
Preliminary Engineering (10% of Constr.)		**$1,006,000**

TOTAL ESTIMATED COST $12,967,000

11/30/2001

Interstate 55 and Mallory Avenue
Cost Estimate
TMP Project No. 99036.07

November 30, 2001

	Area (ac)	Cost/Acre	Total Cost
Clearing & Grubbing	10.1	$1,500	**$15,150**

Earthwork

	Length (ft)	Factor	Total (yd^3)	Cost / yd^3	
I-55	750	13.32	9,990		
Connector Rd.	660	21.32	14,071		
Ramps	4,100	11.11	45,551		
I-55	600	8.89	5,334		
Riverport Rd.	1,360	9.02	12,267		
		Total:	87,213	$6.5	**$566,887**

Pavement Removal

	Length	Width	Total (sf)	Cost/sf	
1 Lane Ramps	2,100	26	54,600		
2 Lane Ramps	700	38	26,600		
Riverport Rd.	600	25	15,000		
			96,200	$4	**$384,800**

		Cost	Total Cost
Drainage	Connector Rd.	**$110,000**	
	Main Line & Ramps	**$130,000**	
	Mallory Ave. (widening)	**$55,000**	
	Riverport Rd.	**$160,000**	
			$455,000

Erosion Control **$110,000**

Structures

Bridges

	Width	Length	Area	Cost/sf	Total Cost
new	116	220	25,520	$80	$2,041,600
widen	74	225	16,650	$80	$1,332,000
new	145	110	15,950	$80	$1,276,000

Replace Rail: 1200 ft $100.00 per ft. $120,000

Demolition

	Width	Length	Area	Cost/sf	Total Cost
Mallory	47	160	7,520	$10	$75,200
Mallory	46	160	7,360	$10	$73,600
Ramp "BC" Br.	34	220	7,480	$10	$74,800
Riverport Rd.	120	100	12,000	$10	$120,000
			Total Demolition Cost:		**$343,600**

Total Structure Cost: **$4,769,600**

Fence

Length	Cost
2,100	$10

$21,000

Paving

	Cost	Length	Total Cost
I-55 4 lane w/ 14' median	$210	750	$157,500
Connector Rd.	$185	660	$122,100
Ramps	$80	4,100	$328,000
Mallory Ave. (overlay)	$45	1,700	$76,500
Mallory Ave. (widening)	$40	650	$26,000
Riverport Rd.	$205	1,130	$231,650
Riverport Rd. (Left Turn & Right Turn Lane)	$40	410	$16,400

Total Paving Cost: **$958,150**

Retaining Walls

Retaining Wall

Height	Length	Area	Cost/sf	
4	350	1400	35	**$49,000**
15	400	6000	35	**$210,000**
10	450	4500	35	**$157,500**
20	500	10000	35	**$350,000**
5	450	2250	35	**$78,750**

$845,250

Maintenance of Traffic **$350,000**

Topsoil

Length	Factor	x 2	Total	Cost per	
350	0.765	2	536	$3.00	
850	0.452	2	768	$3.00	

$3,912

Seeding

Length	Factor	x 2	Total	Cost per	
350	0.083	2	58	$16.00	
850	0.049	2	83	$16.00	
			141		

$2,262

Sodding

	Length	Factor	x 2	Total	Cost per		
Connector Rd.	660	2.034	2	2,685	$3.00		$8,055
Riverport Rd.	1,330	2.034	2	5,410	$3.00		$16,231
						Total Sod	**$24,286**

Signing **$150,000**

Signalization **$160,000**

Guardrail

		Number of Terminals	Cost	Total Cost
		8	$1,000	$8,000
Length of rail	1,200 ft		$10	$12,000

Total Guardrail: **$20,000**

11/30/2001

Rip-Rap **$50,000**

Railroad Crossing (Gates & Signals) - WB Approach of Mallory Ave & Riverport Rd intersection **$60,000**

Right-of-Way

			Cost/acre	Cost			Total Cost
Total acreage	1.7	acres	$75,000	$127,500			
Slope Easmt.	0.4	acres	$25,000	$10,000			
Const. Easmt.	0.4	acres	$25,000	$10,000			
Damages to business because of loss of parking/access				$225,000			
			Total	$372,500	Factor	146%	$543,850
No. of Tracts	6	Cost/tract	$5,000				$30,000
Relocate 0 Businesses			0	@	$100,000		$0
Relocate 0 Residences			0	@	$10,000		$0
				Total Right-of-Way Cost:			**$573,850**

Utilities

Reimbursable

	Length (ft)	Cost/ft	Total Cost
12" Steel Gas	0	$84	$0
16" Water	0	$45	$0
		Total Reimbursable	**$0**

Non-Reimbursable

	Length (ft)	Cost/ft	Cost/each	Total Cost
UG Telephone	0	$16		$0
12" Water	1,600	$36		$57,600
12" SS	1,400	$36		$50,400
Cable	450	$16		$7,200
8" Gas	1,800	$50		$90,000
Electric	21	Poles	$3,100	$65,100
Telephone	17	Poles	$2,000	$34,000
Manholes	11		$1,200	$13,200
			Total Non-Reimbursable	**$317,500**
			Total Utility Cost:	**$317,500**

APPENDIX F

FUNCTIONAL PLANS

TENNESSEE D.O.T. | DESIGN DIVISION | FILE NO.

TENN.	YEAR	SHEET NO.
	2001	1
FED. AID PROJ. NO.		
STATE PROJ. NO.		

Index Of Sheets

SHEET NO.	DESCRIPTION
1	TITLE SHEET
2	TYPICAL SECTIONS
3-7	PROPOSED LAYOUT SHEETS

STATE OF TENNESSEE
DEPARTMENT OF TRANSPORTATION
BUREAU OF PLANNING AND DEVELOPMENT

SHELBY COUNTY

INTERSTATE 55 AND MALLORY AVENUE
INTERCHANGE MODIFICATION STUDY

STATE HIGHWAY NO. 55 F.A.H.S. NO. 55

PROJECT LOCATION

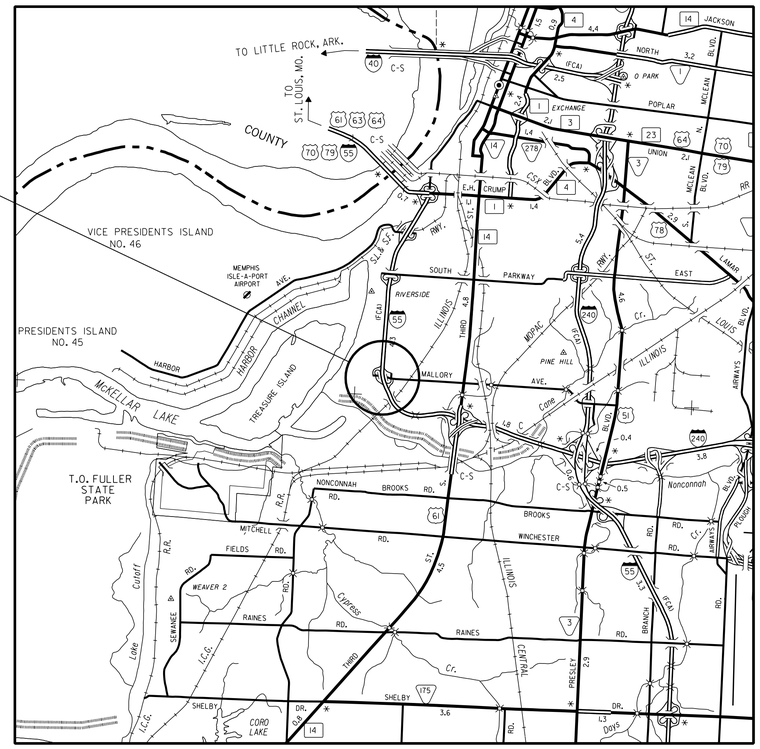

SCALE: 1"= 1 MILE

SPECIAL NOTES

PROPOSALS MAY BE REJECTED BY THE COMMISSIONER IF ANY OF THE UNIT PRICES CONTAINED THEREIN ARE OBVIOUSLY UNBALANCED, EITHER EXCESSIVE OR BELOW THE REASONABLE COST ANALYSIS VALUE.

THIS PROJECT TO BE CONSTRUCTED UNDER THE STANDARD SPECIFICATIONS OF THE TENNESSEE DEPARTMENT OF TRANSPORTATION DATED MARCH 1, 1995 AND ADDITIONAL SPECIFICATIONS AND SPECIAL PROVISIONS CONTAINED IN THE PLANS AND IN THE PROPOSAL CONTRACT

DESIGNED BY THOMAS & MILLER, LLC

DESIGNER THOMAS M. CLINARD, P.E. CHECKED BY _____

P.E. NO. _____

Survey & Design Bureau

TRAFFIC DATA	
ADT (2005)	65,320
ADT (2025)	96,640
DHV (2025)	9,664
D	55 - 45
T (ADT)	25 %
T (DHV)	17 %
V	60 MPH

APPROVED: _____
DIRECTOR, DESIGN DIVISION

DATE: _____

APPROVED: _____
COMMISSIONER

U.S. DEPARTMENT OF TRANSPORTATION
FEDERAL HIGHWAY ADMINISTRATION

APPROVED: _____
DIVISION ADMINISTRATOR DATE

TENNESSEE D.O.T. | DESIGN DIVISION | FILE NO.

TYPE	YEAR	PROJECT NO.	SHEET NO.
A.P.R.	2001		2

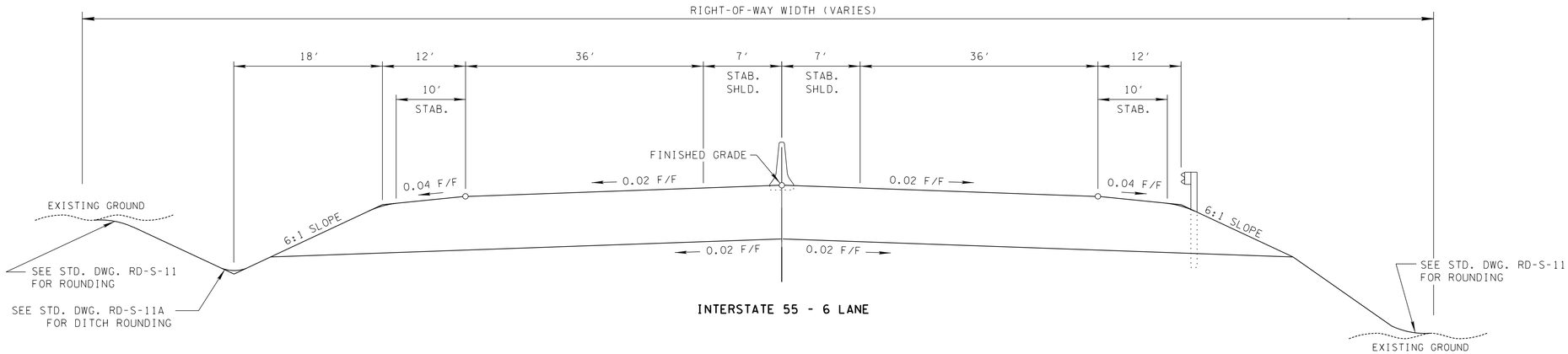

INTERSTATE 55 - 6 LANE

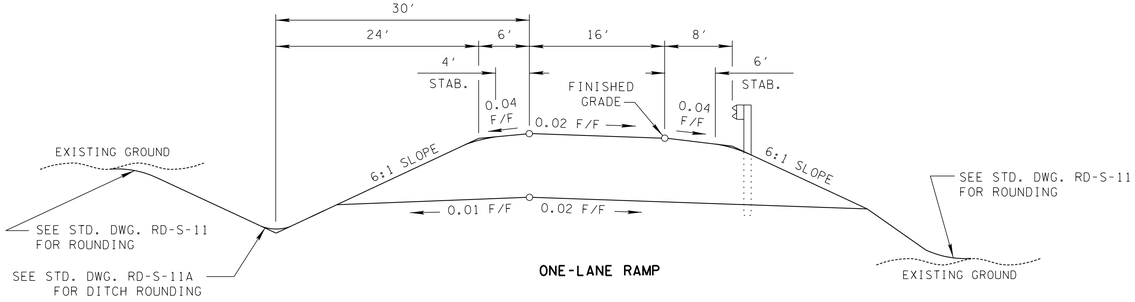

ONE-LANE RAMP

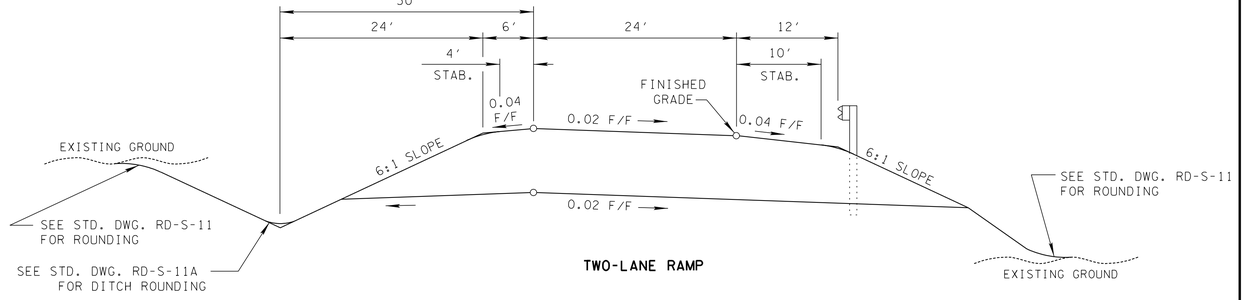

TWO-LANE RAMP

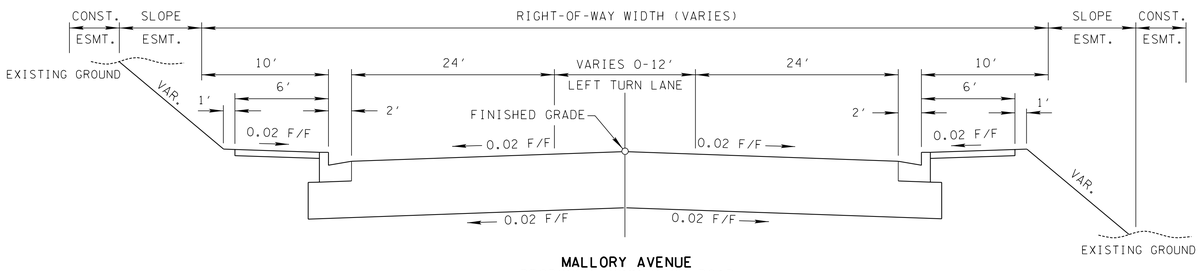

MALLORY AVENUE
PROPOSED CONNECTOR ROAD
RIVERPORT ROAD

STATE OF TENNESSEE
DEPARTMENT OF TRANSPORTATION
BUREAU OF PLANNING & DEVELOPMENT

TYPICAL SECTIONS

TENNESSEE D.O.T.	FILE NO.
DESIGN DIVISION	

TYPE	YEAR	PROJECT NO.	SHEET NO.
A.P.R.	2001		3

0 50 100 150

STATE OF TENNESSEE
DEPARTMENT OF TRANSPORTATION
BUREAU OF PLANNING & DEVELOPMENT

I-55 AND MALLORY AVENUE INTERCHANGE MODIFICATION STUDY

SHELBY COUNTY
MEMPHIS, TN.

TYPE	YEAR	PROJECT NO.	SHEET NO.
A.P.R.	2001		4

TENNESSEE D.O.T.
DESIGN DIVISION

FILE NO.

N

MATCH LINE

SEE SHEET NO. 3

M.L. KING RIVERSIDE PARK

PRES. R.O.W.

PROPOSED RETAINING WALL

16'

24'

60'

91'

CLOSE STREET

PRES. R.O.W.

COMMERCIAL INDUSTRIAL

PROPOSED RETAINING WALL

PROP. R.O.W.

PROPOSED RETAINING WALL

SEE SHEET NO. 7

MALLORY AVE.

60'

PROPOSED SIGNAL UNDER I-55

PROP. R.O.W.

PROPOSED STRUCTURE OVER MALLORY AVENUE

PROPOSED RETAINING WALL

MAPCO REFINERY

I-55

PROPOSED RETAINING WALL

16'

16'

MATCH LINE

PRES. R.O.W.

24'

PRES. R.O.W.

SEE SHEET NO. 5

BEGIN 2500' TAPER (PARALLEL AUXILIARY LANE)

WIDEN EXISTING STRUCTURE OVER I.C.R.R.

I.C.R.R.(Y.& M.V.R.R.)

MATCH LINE

AREA TO BE SCARIFIED, TOPSOILED & SEEDED

0 50 100 150

STATE OF TENNESSEE
DEPARTMENT OF TRANSPORTATION
BUREAU OF PLANNING & DEVELOPMENT

I-55 AND MALLORY AVENUE INTERCHANGE MODIFICATION STUDY

SHELBY COUNTY
MEMPHIS, TN.

TENNESSEE D.O.T.
DESIGN DIVISION

FILE NO.

TYPE	YEAR	PROJECT NO.	SHEET NO.
A.P.R.	2001		5

N

SEE SHEET NO. 4

MATCH LINE

I.C.R.R.(Y.& M.V.R.R.)

WIDEN EXISTING STRUCTURE OVER I.C.R.R.

PROPOPSED STRUCTURE OVER I.C.R.R.

PRES. R.O.W.

MATCH LINE

SEE SHEET NO. 7

60'

RIVERPORT RD.

MAPCO REFINERY

PROPOSED STRUCTURE OVER RIVERPORT ROAD & I.C.R.R.

PRES. R.O.W.

PRES. R.O.W.

I-55

RAILROAD

TO FUTURE SUPERTERMINAL

I.C.R.R.(Y.& M.V.R.R.)

PRES. R.O.W.

SEE SHEET NO. 6

MATCH LINE

0 50 100 150

STATE OF TENNESSEE
DEPARTMENT OF TRANSPORTATION
BUREAU OF PLANNING & DEVELOPMENT

I-55 AND MALLORY AVENUE INTERCHANGE MODIFICATION STUDY

SHELBY COUNTY
MEMPHIS, TN.

TENNESSEE D.O.T.
DESIGN DIVISION

FILE NO.

TYPE	YEAR	PROJECT NO.	SHEET NO.
A.P.R.	2001		6

0 50 100 150

STATE OF TENNESSEE
DEPARTMENT OF TRANSPORTATION
BUREAU OF PLANNING & DEVELOPMENT

I-55 AND MALLORY AVENUE INTERCHANGE MODIFICATION STUDY

SHELBY COUNTY
MEMPHIS, TN.

TENNESSEE D.O.T.
DESIGN DIVISION

FILE NO.

TYPE	YEAR	PROJECT NO.	SHEET NO.
A.P.R.	2001		7

MATCH LINE
SEE SHEET NO. 4
SEE SHEET NO. 3
SERVICE STATION
PROP. R.O.W.
MALLORY AVE.
PROPOSED RETAINING WALL
PARKING LOT
PROPOSED SIGNAL
COMMERCIAL (PARKING LOT)
PRES. R.O.W.
FARRINGTON
RESIDENTIAL
SWIFT
WEST DAVANT
RESIDENTIAL
BENFORD
RIVERPORT RD.
RAILROAD
TO I-240
PROPOSED CONNECTOR ROAD
UNSIGNALIZED INTERSECTION

0 50 100 150

STATE OF TENNESSEE
DEPARTMENT OF TRANSPORTATION
BUREAU OF PLANNING & DEVELOPMENT

I-55 AND MALLORY AVENUE INTERCHANGE MODIFICATION STUDY

SHELBY COUNTY
MEMPHIS, TN.

APPENDIX G

ALTERNATIVES FOR IMPROVEMENTS CONSIDERED

TYPE	YEAR	PROJECT NO.	SHEET NO.
A.P.R.	2001		7

TENNESSEE D.O.T.
DESIGN DIVISION
FILE NO.

STATE OF TENNESSEE
DEPARTMENT OF TRANSPORTATION
BUREAU OF PLANNING & DEVELOPMENT

I-55 AND
MALLORY AVENUE
INTERCHANGE
MODIFICATION STUDY

ALTERNATE A

SHELBY COUNTY
MEMPHIS, TN.

TENNESSEE D.O.T.
DESIGN DIVISION

FILE NO.

TYPE	YEAR	PROJECT NO.	SHEET NO.
A.P.R.	2001		8

STATE OF TENNESSEE
DEPARTMENT OF TRANSPORTATION
BUREAU OF PLANNING & DEVELOPMENT

I-55 AND MALLORY AVENUE INTERCHANGE MODIFICATION STUDY

ALTERNATE B

SHELBY COUNTY
MEMPHIS, TN.

TENNESSEE D.O.T.
DESIGN DIVISION

FILE NO.

TYPE	YEAR	PROJECT NO.	SHEET NO.
A.P.R.	2001		9

STATE OF TENNESSEE
DEPARTMENT OF TRANSPORTATION
BUREAU OF PLANNING & DEVELOPMENT

I-55 AND MALLORY AVENUE INTERCHANGE MODIFICATION STUDY

ALTERNATE C

SHELBY COUNTY
MEMPHIS, TN.

TENNESSEE D.O.T.
DESIGN DIVISION

FILE NO.

TYPE	YEAR	PROJECT NO.	SHEET NO.
A.P.R.	2001		10

STATE OF TENNESSEE
DEPARTMENT OF TRANSPORTATION
BUREAU OF PLANNING & DEVELOPMENT

I-55 AND MALLORY AVENUE INTERCHANGE MODIFICATION STUDY

ALTERNATE D

SHELBY COUNTY
MEMPHIS, TN.